Another Striking New Meccano Model:

Three-Engine Biplane

THE desire to conquer the air has possessed man throughout the ages. For example, Icarus, of ancient Greek legend fame, sought to cross the Ægean Sea by fastening wings to his shoulders with wax. The sun shone so fiercely, however, that it melted the wax and Icarus forthwith did what would nowadays be described as a "nose dive" into the Ægean Sea!

Many would-be aeronauts suffered a more or less similar fate, for it was thought that successful flight could only be attained by constructing a device that imitated the actions of a bird in flight. Such machines were operated invariably by "man power," which often proved inadequate for the task and so spelt disaster!

But it was not along these lines that the conquest of the air was achieved! It was left to Lilienthal, a German who experimented with gliders, to solve successfully the problem of flight. He proved that a machine with fixed planes could be made to glide through the air. The glider was launched from a hill top or similar elevated position and flew through the air at a slight downward angle to maintain sufficient speed, making a landing some distance away. He made some astonishingly long flights, but eventually met with a fatal accident. Although gliders were not fitted with motors, the study of their behaviour in flight proved invaluable to the designers of the power-propelled aeroplane that was yet to come.

The rapidity with which aviation has developed, especially since the war, is one of the wonders of the twentieth century. Perhaps an idea of the tremendous strides made in aircraft design may be grasped by comparing such a machine as the Armstrong Whitworth "Argosy" type, made for Imperial Airways Limited and the prototype of the Meccano model, with say, the "Wright" aeroplane with which the first successful flight of a heavier-than-air machine was accomplished twenty-five years ago.

Features of Modern Aircraft

It has long been recognised that multi-engine aeroplanes possess a considerable advantage over the single-engine type. The former type can keep flying even if one engine stops: but the single engine machine has to come down in the event of engine failure.

The practical difficulties of employing multiple engines in aircraft are fast disappearing and it is evident that the multi-engine planes will be the aircraft of the future.

The three-engine "Argosy" aeroplane, for instance, represents one of the finest examples in modern aircraft design. It is a very large machine, having a wing span of approximately 90 feet and accommodation for 20 passengers. The three Siddeley "Jaguar" engines develop 1,200 h.p., and each drives a tractor airscrew. Balanced ailerons and elevators are fitted, thereby permitting manœuvring to be carried out without undue fatigue to the pilot.

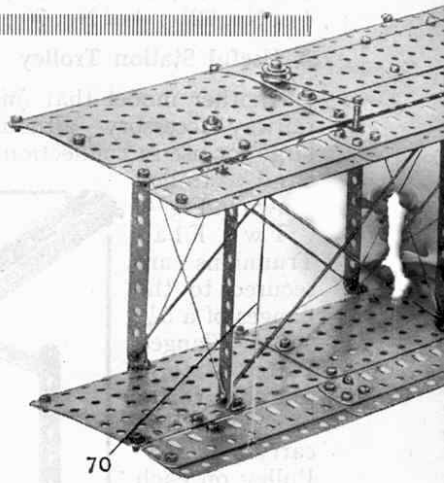

The fuselage and many other parts of the machine are of tubular steel construction. As modern research has proved conclusively, this method of construction is vastly superior to the old method of using wooden spars. This point will be realised from the fact that a correctly shaped steel spar is nearly 25 per cent. stronger than a wooden spar weighing 20 per cent. more.

The main passenger saloon is designed on very commodious lines, being some 30 feet long and 6 feet high. Two rows of very comfortable wicker armchairs are provided, and large windows, which may be opened if desired, allow a splendid view to be obtained of the landscape when the aeroplane is in flight, besides making the saloon very light.

Parts required to build the

6	of	No.	1	2	of	No.	15A
2	„	„	1A	3	„	„	16
14	„	„	2	2	„	„	16A
2	„	„	3	1	„	„	16B
6	„	„	4	2	„	„	17
20	„	„	5	3	„	„	18A
18	„	„	6	4	„	„	20A
10	„	„	6A	5	„	„	23
4	„	„	7A	6	„	„	24
12	„	„	8	6	„	„	30
4	„	„	9B	2	„	„	31
4	„	„	9D	24	„	„	32
2	„	„	9F	489	„	„	37
12	„	„	10	74	„	„	37A
6	„	„	11	2	„	„	37B
86	„	„	12	42	„	„	38
2	„	„	13A	6	„	„	41
1	„	„	14	3	„	„	48

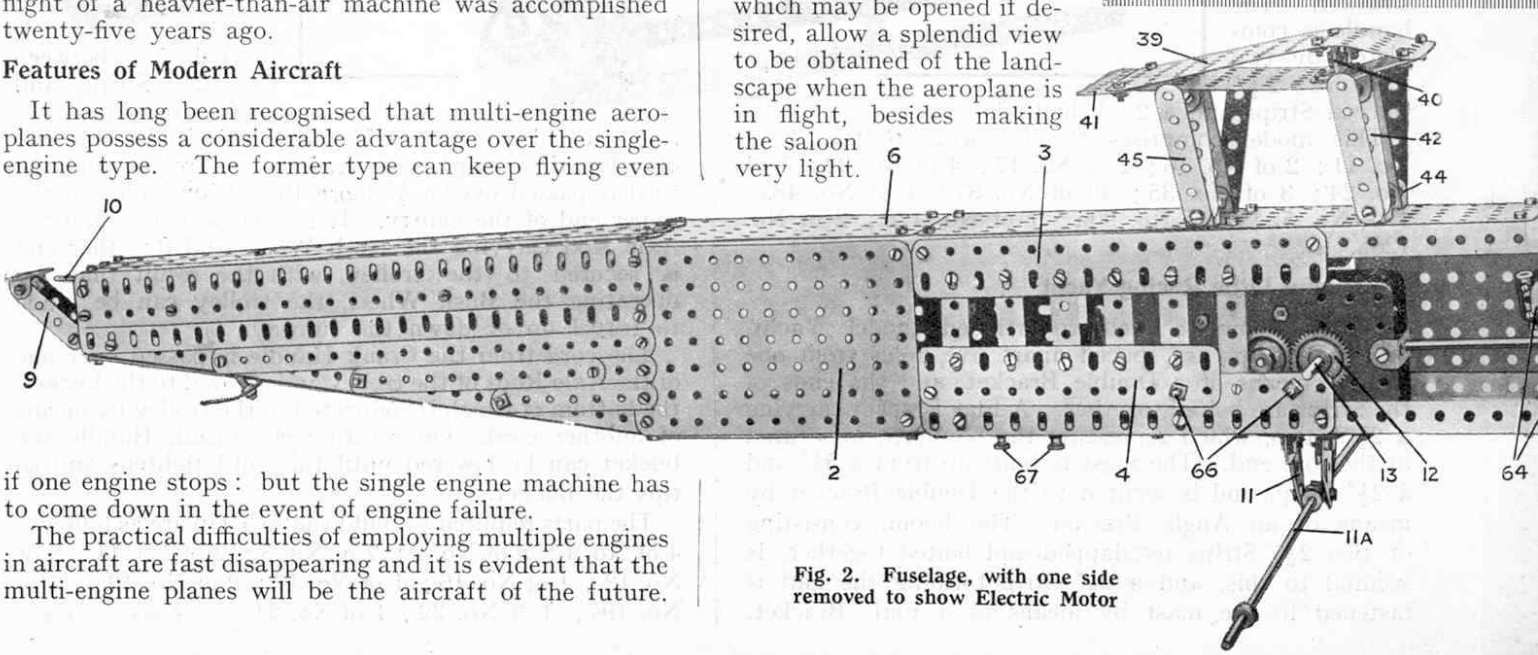

Fig. 2. Fuselage, with one side removed to show Electric Motor

A Copy of the Armstrong-Whitworth "Argosy" type Air Liner

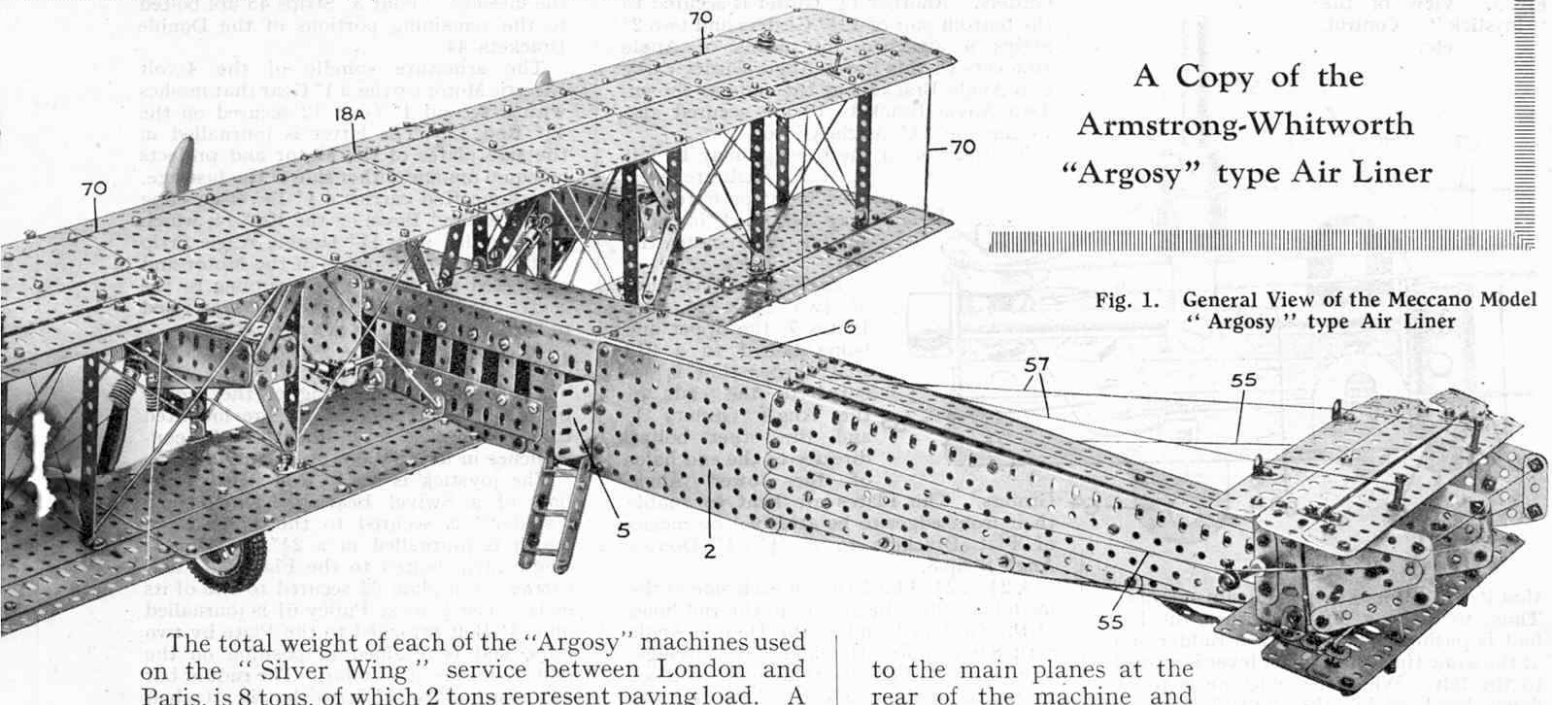

Fig. 1. General View of the Meccano Model "Argosy" type Air Liner

The total weight of each of the "Argosy" machines used on the "Silver Wing" service between London and Paris, is 8 tons, of which 2 tons represent paying load. A maximum speed of approximately 110 m.p.h. can be obtained, the normal cruising speed being in the neighbourhood of 95 m.p.h. This is truly a remarkable performance for so huge a machine.

uild the Three-Engine Biplane

5A	2 of No. 48A	7 of No. 103K	
6	46 „ „ 52A	9 „ „ 111	
6A	15ft. „ „ 58	3 „ „ 111A	
6B	8 „ „ 59	56 „ „ 111C	
7	5 „ „ 62B	20 „ „ 114	
8A	3 „ „ 63	2 „ „ 126A	
0A	22 „ „ 70	4 „ „ 140	
3	5 „ „ 72	1 „ „ 165	
4	3 „ „ 76	2 „ „ 302	
0	2 „ „ 82	2 „ „ 303	
1	12 „ „ 101	2 „ „ 304	
2	18 „ „ 103	2 „ „ 305	
7	2 „ „ 103A	2 „ „ 306	
7A	4 „ „ 103B	8 „ „ 312	
7B	11 „ „ 103D	1 Electric Motor	
8	4 „ „ 103F		
1	5 „ „ 103G		
8	3 „ „ 103H		

The Meccano model of the "Argosy" has been designed to resemble the original as closely as possible. The ailerons, elevators and rudders are connected to their respective controls in the cockpit (in the nose of the machine) by wires, and work as in the prototype. One 4-volt Meccano Electric Motor concealed in the fuselage drives the three propellers at the armature speed of the Motor, no reduction being found necessary.

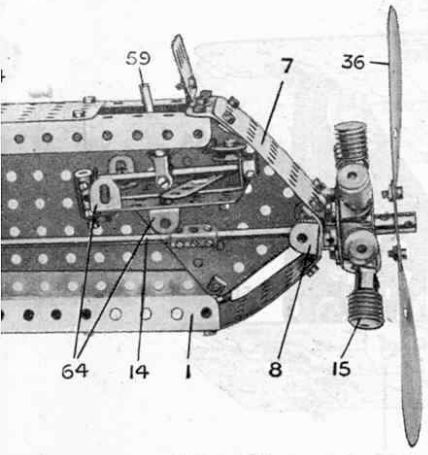

How an Aeroplane is Controlled

At this juncture it would be well to give Meccano boys a brief description of the controls of an aeroplane and the manner in which they are used.

From the bottom of the fuselage in the pilot's seat there projects a vertical bar, called the control column, or "joystick." This is pivoted about three-quarters of the way down and can be moved backward and forward and from side to side from the pivoting point. The stick controls the elevator and ailerons. The elevator is a horizontal controlling flap set parallel to the main planes at the rear of the machine and hinged so that it can be moved upward and downward. It is connected to the control column by wires so that, when the stick is pushed forward, the elevator moves downward from its hinge, thus presenting more resistance to the air when the aeroplane is in flight and sending the nose of the machine downward. When the stick is pulled back the elevator flap is raised and the nose of the machine goes up.

The control column is also connected to the aileron flaps on each of the four wings. These flaps move upward or downward according to the movements of the control column. When the stick is moved to the left, the ailerons on the right side are pulled down, setting up an additional resistance on that side and causing that wing to rise. At the same time the ailerons on the left side are slightly pulled up, assisting the downward motion of the left wing. The movement of the ailerons is slight, but sufficient to cause the machine to bank and make an effective turn.

When the lever is pushed to the right, on the other hand, the left ailerons are depressed, and those on the right slightly raised, so that the machine banks to the right.

The rudder is controlled by wires connected to the rudder bar, which is a piece of wood or metal pivoted about its centre and arranged athwartships, so that the pilot can swing it about its centre with his feet. The rudder is parallel to the fore-and-aft line of the machine when the rudder bar is square, and the machine will then fly straight, but if one side is pushed forward the rudder is swung in the same direction. For example, if the left foot is pushed forward the rudder swings to the left, more resistance to the wind being thus given on that side, so that the tail of the machine is forced to the opposite direction and the nose of the machine turns to the left. To turn the machine to any side, therefore, the foot on that side is pushed forward on the rudder bar.

In order to make a turn, however, it is not sufficient to move the rudder bar in the required direction. If the rudder only is used the machine skids, or slips outward, an effect due to the difference in speed between the inner and outer wing tips. The aeroplane must be banked so

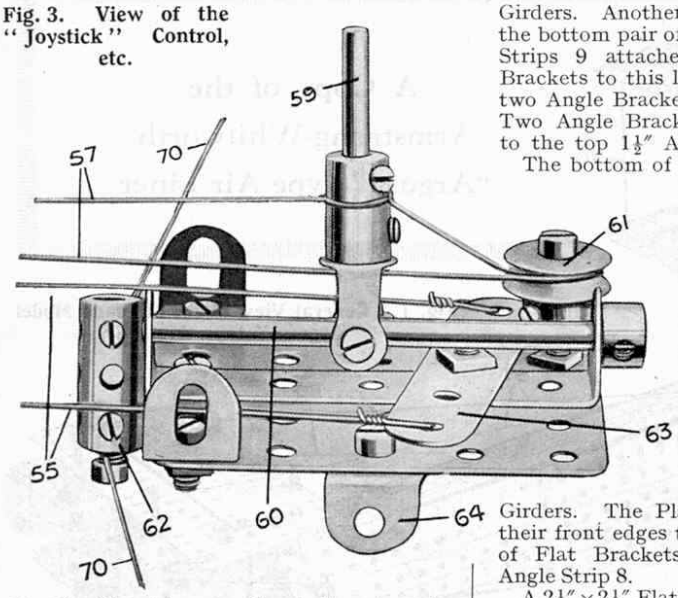

Fig. 3. View of the "Joystick" Control, etc.

that it will not lose speed and slip outward. Thus, to make a left-hand turn the left foot is pushed forward on the rudder and at the same time the control lever is moved to the left. When the machine is to be flown level again, the control lever is pushed across again and a little past the central position, and the right foot is pressed on the rudder. The controls are then centred so that the machine flies straight and level.

Construction of the Fuselage

The building of the body of the model, or "fuselage," should be proceeded with first. It consists essentially of four 18½″ Angle Girders 1 with four 12½″ Angle Girders bolted to their ends to form the sloping tail portion. Two 5½″×3½″ Flat Plates 2 are bolted at each end of the Girders 1. (In Fig. 2 the Plate at the front end has been removed to show the inside details of the fuselage). The saloon windows are represented by 2″ Strips bolted to a 7½″ Flat Girder 3 and also to a 5½″ Flat Girder 4, the latter being secured to another 7½″ Flat Girder that is attached to the bottom Girder 1. The construction of the windows on the opposite side of the saloon is similar to that just described, except that a door 5 (Fig. 1) consisting of a 2″ Flat Girder, is hung from the Plate 2 by means of Hinges. To accommodate the door the Flat Girders on this side are moved forward four holes and also the rearmost 2″ Strip is omitted, a 3½″ Flat Girder taking its place.

The sides of the tapering tail portion of the fuselage formed by the 12½″ Angle Girders are closed in by means of 12½″ Flat Girders and Strips, disposed as indicated in Figs. 1 and 2. The upper and lower 12½″ Angle Girders have their extreme ends held together by 1½″ Angle Girders.

The top of the fuselage is composed of 5½″×2½″ Flat Plates 6 bolted to the Girders 1, a space being left at the front end for the cockpit. The top of the tapering portion consists of three 12½″ Strips bolted at the rear end to a 1½″ Angle Girder that is secured across the ends of the two top 12½″ longitudinal Girders. Another 1½″ Girder is secured to the bottom pair of 12½″ Girders and two 2″ Strips 9 attached by means of Angle Brackets to this lower Angle Girder carry two Angle Brackets at the ends as shown. Two Angle Brackets 10 are secured also to the top 1½″ Angle Girder.

The bottom of the fuselage may be left open to facilitate erection, or, if preferred, it may be filled in in a similar manner to the top.

The "nose" consists of two 2½″×2½″ Flat Plates 7, the upper one being bolted to a 2½″ Flat Girder that is secured to the ends of the Angle Girders 1, and the other bolted directly to the end holes of the lower Angle Girders. The Plates are bent to enable their front edges to be attached by means of Flat Brackets to a 2½″×½″ Double Angle Strip 8.

A 2½″×2½″ Flat Plate on each side of the model is bolted diagonally to the end holes of the Girders 1 and to the Double Angle Strip 8 to complete the sides of the fuselage. The controls (Fig. 3) are secured in place by means of the Angle Brackets 64: the position in which they are bolted to the Plates 2 is shown clearly in Fig. 2.

Two Flat Trunnions 11 secured to 2½″ Angle Girders that are bolted across the bottom Girders 1 (Fig. 2) carry a Coupling, in the longitudinal bore of which two 8″ Rods 11a are secured. The Coupling is secured to the Trunnion by means of bolts that are passed through the end holes of the Trunnions and inserted in the tapped centre holes of the Coupling. A Washer is placed on the shank of each bolt between the Coupling and the Trunnion, and the bolts tightened up securely.

The centre section (Fig. 2) is shaped to the streamline section of the main planes and consists of two 5½″×3½″ Flat Plates 39, with two 2½″ Angle Girders 40 bolted between them in the form of a channel section girder. A 3½″ Flat Girder 41 is attached to the trailing edge of these Plates. Four 2½″ Strips 42 are bolted to two Double Brackets attached to the underside of the centre section and their other ends are bolted to two pairs of Double Brackets 44 that are secured to the top of the fuselage. Four 3″ Strips 45 are bolted to the remaining portions of the Double Brackets 44.

The armature spindle of the 4-volt Electric Motor carries a 1″ Gear that meshes with a second 1″ Gear 12 secured on the 4½″ Rod 13. The latter is journalled in the side plates of the Motor and projects an equal amount either side of the fuselage. The same Rod carries a 1″ Bevel meshing with a second Bevel on the Rod 14, which is journalled in a 1½″ Double Angle Strip bolted to the side plates of the Motor and connected by means of a Coupling to the centre engine in a manner to be described in the February issue of the "*M.M.*"

The Controls (Fig. 3)

The controls, consisting of the rudder bar 63 and the joystick 59, are mounted together on a 2½″×2½″ Flat Plate for convenience in fixing them in the fuselage.

The joystick is a 1½″ Rod held in the boss of a Swivel Bearing. The latter's "spider" is secured to the 3″ Rod 60, which is journalled in a 2½″×½″ Double Angle Strip bolted to the Flat Plate and carries a Coupling 62 secured to one of its ends. The ½″ loose Pulley 61 is journalled on a ¾″ Bolt attached to the Plate by two nuts, and is retained in position on the bolt by means of a Collar. The rudder bar 63 consists of a 2½″ Strip that is attached pivotally by means of a lock-nutted bolt (see Standard Mechanism No. 262) to the 2½″×2½″ Flat Plate. The ½″×½″ Angle Brackets 64 are for the purpose of attaching the Flat Plate to the side Plates of the fuselage in the position indicated in Fig. 2.

The Tail Unit

As will be seen from Fig. 4 both the upper and lower elevators (fixed and moving) of the tail unit are exactly similar in construction: therefore the description of one should suffice to make the whole clear. The fixed portion of the elevator consists of a 7½″ Flat Girder 47 and another Flat Girder 46 8½″ in length (obtained by bolting a 1½″ Flat Girder to one end of a 7½″ Girder). The two Girders are laid side by side and connected together at each end by means of Flat Brackets, a 1½″ Strip lending additional support in the centre. The longer Girder 46 overlaps the shorter one by one hole at each end.

The movable portion of each elevator consists of a 9½″ Flat Girder with 2″ Flat Girders at the ends. (*Continued on page* 81)

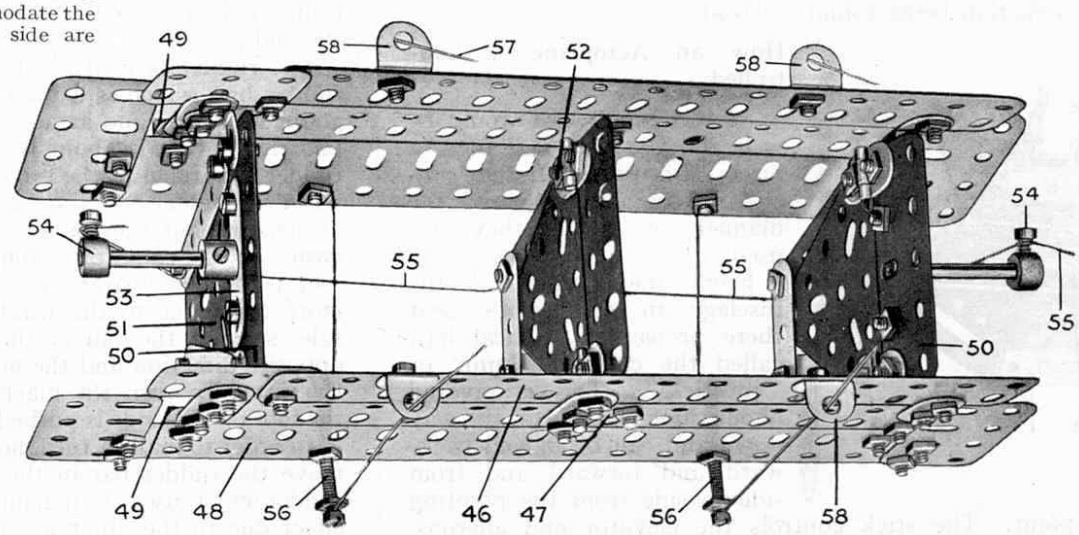

Fig. 4. Tail, showing hinged Rudders and Elevators, etc.

Scientific Apparatus in Meccano

(*Continued from page* 41)

is the framework holding the lamp bulb; as will be seen this consists of two square end pieces composed of 3″ Angle Girders bolted together. The support for the lamp holder may consist of either a piece of stout cardboard on tin plate having a hole cut in it sufficiently large to admit the screwed portion of the holder. Wires from the two poles of the holder are taken to terminals bolted to, but insulated from the frame.

The objective taken from the microscope is held between two pieces of stout cardboard or sheet tin 8. These are secured by 2½″ Strips that are bolted to short Angle Girders which, in turn, are secured to two 5½″ Strips. These Strips are bolted at one end to the framework holding the lamp and at the other end to a 3″ Angle Girder, the ends of which are fastened by Angle Brackets to further Strips that slide in Eye Pieces bolted to the inner sides of the base Angle Girders.

The Rack Strip 5 is attached to one of these Strips by means of a Double Bracket. It is kept in mesh with the Worm 4 which is carried on an 11½″ Rod. On turning the 1″ Gear Wheel 3, the framework carrying the objective holder 8 and the lamp frame will move backward or forward while the slide holder 6 remains stationary. The holder carrying the condensing lens 7 is mounted on Eye Pieces so that it may be pushed to and fro on the 5½″ Strips that are secured to the lamp framework, and the light focussed accordingly.

It now remains to construct the cover that is fitted over the lamp and incorporates the second condensing lens 9. Heavy cardboard should be used for the cover, so that all light is excluded except that issuing from the lens.

Operation of the instrument is very simple. A screen should first be arranged in the room where the demonstration is to take place. It may consist of a white sheet or a portion of the wall if it is of a plain white colour. The lamp having been coupled to an accumulator or transformer, etc., the slide is placed in its holder 6 and the wheel 3 rotated backward or forward until the specimen is seen to be in focus on the screen. The condensing lens 7 should then be adjusted.

How to Use Meccano Parts—

(*Continued from page* 39)

Meccano. Curved lines are not often required in mechanical engineering, but since Meccano is equally at home in the civil branch of the profession, arcs and circles, etc., are almost essential adjuncts to the system.

In mechanical engineering the Curved Strips prove useful in the construction of rotating mechanisms. Fig. 5 shows a useful flywheel built up from four 2½″ small radius Curved Strips. The diameter of the circle so formed is not standard with the system, and therefore, in order to form spokes for such a wheel, it is necessary to connect 2½″ Strips between the Curved Strips by means of Flat Brackets, the slotted holes of which allow the Strips to be secured centrally.

Complete circles suitable for flywheels, etc., may also be built up from eight 2½″ large radius Curved Strips or from four 3″ Curved Strips.

Fig. 6 shows how the Circular Strip may be used in a built-up roller bearing.

Flat Brackets, which are really two-hole Strips, will be dealt with in Class C, as also will Single, Double, and Cranked Bent Strips. Rack Strips are in Class O.

Meccano Biplane—

(*continued from page* 50)

It is attached to its respective fixed portion by Hinges 49. The two units—consisting of one fixed and moving plane—are spaced apart by 2½″ Flat Girders 50 attached by means of ½″ × ½″ Angle Brackets to the Flat Girders 47. Bolted to the Flat Girders 50 are Hinges to which the rudders 51 are attached. The rudders each consist of a 2½″ Triangular Plate, along the edges of which two 2½″ Strips and a 1½″ Strip are bolted.

Double-arm Cranks 53 are bolted to the two outside 2½″ Flat Girders 50, and Collars 54 are secured on the ends of 1½″ Rods held in the bosses of the Double-arm Cranks. The rudder wires 55 are to be taken round the shanks of ordinary bolts that are inserted in the set-screw holes of the Collars 54.

Two ¾″ Bolts 56 are attached to the moving portion of each elevator at the extreme trailing edge. The control wires 57 are secured to these bolts, and are led through guides 58 consisting of Angle Brackets bolted to the leading edges of the Flat Girders 46.

The remainder of the instructions for completing this model will appear in next month's "M.M." In that number we shall publish illustrations of the wings, engines, landing wheels and a splendid front view of the complete model. Each part will be described in detail and full instructions will be given for assembling the various units.

Famous Inventions—

(*continued from page* 20)

The "Fire Suds" pump has two entirely separate gunmetal pump chambers, of positive action type, driven at engine speed by an extension of the first motion shaft through the change speed gearbox. One pump chamber takes its supply from either of the alkaline solution tanks and the other from one of the acid solution tanks. The suction pipes leading to the tanks are controlled by a group of gunmetal valves with copper pipes arranged conveniently for operation from the footboards of the engine.

The delivery from each pump chamber is taken to a hydraulic hose reel having two separate extensive lines of rubber hose, jointed together at the extreme end by a short length of rubber delivery hose with branch-pipe and nozzle. The acid and the alkaline solutions are pumped through the separate lines of hose, and mix at the base of the branch-pipe, thus forming "Fire Suds."

All the tanks are kept charged ready for immediate use on arrival at a fire. With the engine running, either or both the pumps are put into gear by a single lever to the left of the driver, and the clutch is then let in, bringing the pumps into operation. By means of control valves the outlets of one alkaline and of one acid tank are opened and the solutions are pumped through the hoses, the resulting mixture being directed on to the fire.

When the first solution tanks are exhausted, as indicated by a pressure gauge, the outlets are closed and those of the second two tanks are opened by the manipulation of the control valves. Before there is time for the latter to be exhausted, the first tank can be recharged with alkaline solution, and the process repeated until all six acid tanks have been emptied, by which time 1,800 gallons of "Fire Suds" will have been produced.

Our Daily Bread—

(*continued from page* 23)

and causes the grain to lose its starch. The risk of an outbreak of the disease is greatest at the end of a rainy growing season, for the fungus flourishes in damp weather. There have been no widespread epidemics since 1816, however, when the districts of Lorraine and Burgundy were ravaged by the disease at the end of a particularly wet summer, and now that wheat is displacing rye, further outbreaks on a large scale are very unlikely.

New Meccano Models—

(*continued from page* 47)

5 of No. 35; 36 of No. 37; 1 of No. 40; 2 of No. 48a; 1 of No. 52; 6 of No. 111c; 2 of No. 125; 2 of No. 126; 2 of No. 126a.

Stone Sawing Machine

No doubt many Meccano boys have watched giant stone sawing machines cutting their way slowly but surely through huge blocks of stone that sometimes weigh several tons. The designer of the Meccano model shown in Fig. 7 has endeavoured to reproduce one of these machines with the aid of a small Outfit, and we think readers will agree that he has succeeded remarkably well.

The swinging saw consists of a 5½″ Strip lock-nutted to a 2½″ Strip at each end, and these 2½″ Strips are supported on 3½″ Axle Rods journalled in the vertical members of the model. One of the Rods carries two 1″ Pulleys that are clamped firmly against the 2½″ Strips, and two further Pulleys are secured on the end of this Rod and clamped against another 2½″ Strip, which is connected pivotally to a Bush Wheel by means of a 5½″ Strip. The Bush Wheel is secured to a Crank Handle journalled in two Flat Trunnions bolted to the side frames of the model. Hence on rotation of the Handle the saw swings to and fro in a very realistic manner.

The Stone Sawing Machine comprises the following parts: 4 of No. 1; 7 of No. 2; 1 of No. 3; 3 of No. 5; 2 of No. 16; 1 of No. 19s; 4 of No. 22; 1 of No. 24; 6 of No. 35; 38 of No. 37; 4 of No. 37a; 1 of No. 48a; 2 of No. 126a.

Chocolates for New Year

The House of Cadbury have recently brought out many new chocolates of quality, the new assortments including Lady Betty, Bermuda, Riverside and the new Prince of Wales chocolates in their richly coloured box. We take this opportunity to remind our readers that Cadbury's cater for those who like hard centres by an assortment of that name, and for those who prefer soft centres there are such assortments as Esmond and Countess Cremes. Most Meccano boys have a little extra pocket money at this time of the year and we have no doubt that after carefully balancing the attractions of new Meccano parts and chocolates, they will manage to arrange matters so as to allow of a visit to the tuckshop!

A Pocket Surveying Instrument

An instrument that will be of interest to all boys is the Pocket Surveyor designed by Mr. G. C. Sherrin, and produced by George Philip & Son Ltd., 32, Fleet Street, London, E.C.4. Although it is simply made and costs only 2/6, it is very practical and may be used for an astonishing variety of measurements. With its aid the widths of rivers and the heights of hills and buildings are easily found, and even complete surveys may be made with fair accuracy.

The Surveyor will be especially valuable to Meccano boys who wish to reproduce a large engineering structure, such as a bridge, for they will be able to measure its dimensions and plan an exact scale model. Other interesting uses are suggested in the booklet that accompanies the instrument. Among these may be mentioned the levelling and correct marking out of football fields, tennis courts and camp sites.

The instrument is made of oxidised steel, and is rustless and unbreakable. It is only five inches in length, and when closed occupies little more space than a pocket knife.

A Striking New Meccano Model:

Giant Three-Engine

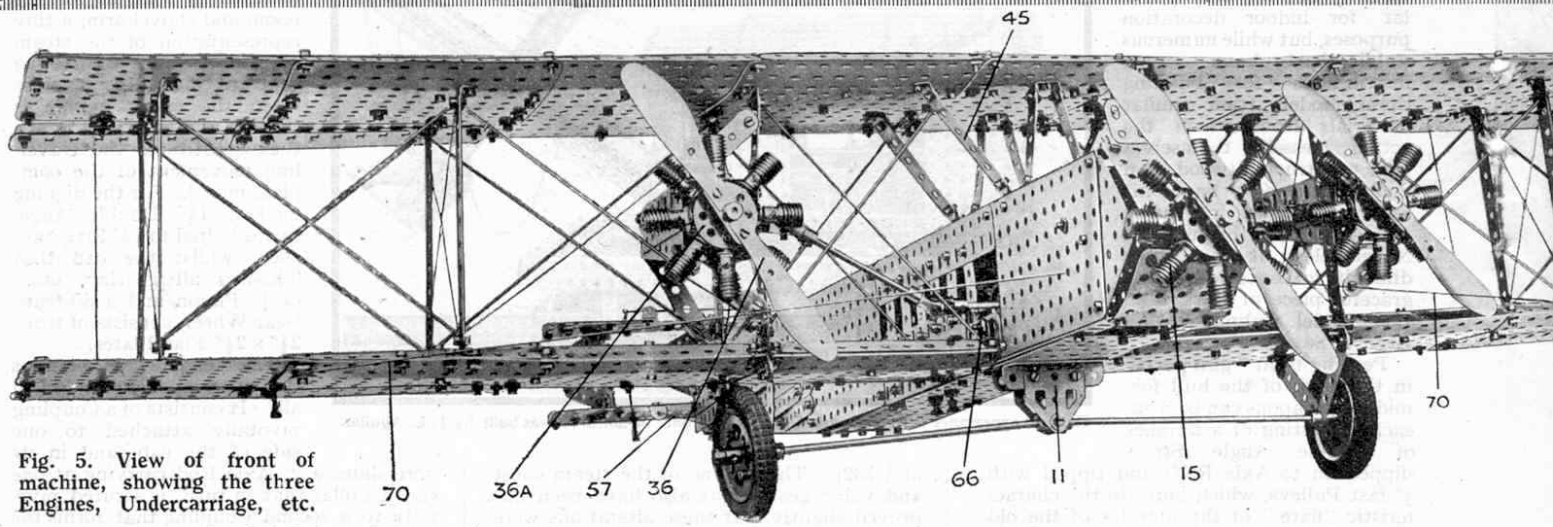

Fig. 5. View of front of machine, showing the three Engines, Undercarriage, etc.

(Concluded from last month)

IN this article we conclude the detailed instructions for building the Meccano model Three-engine Biplane.

In last month's "*M.M.*" we described the erection of the fuselage and tail unit and explained the principles of operation of the rudder control mechanism and joystick. The present article includes instructions for building the main planes, engines, etc., and comprises also directions for the final assembly of the various units and of the aileron controls. In reading the article it should be borne in mind that Figs. 1 to 4 appeared in the January "*M.M.*"

Before leaving the fuselage and proceeding to the construction of the remaining units, the centre "engine" should be mounted in place (for details of its construction, see under "The Wing Engines"). It is secured to a Double Angle Strip 8 (Fig. 2) in the nose of the machine by means of two ½" Bolts placed through the holes 29a in the Bush Wheel 35 (Fig. 6). A Collar on each bolt serves to space the engine away from the Double Angle Strip. The Rod 14 (Fig. 2) is connected by a Coupling to a 3½" Rod that is free to rotate in the boss of the Bush Wheel 35. The propeller is secured to the outer end of this Rod.

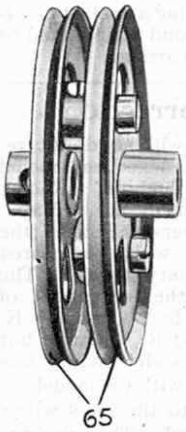

Fig. 7. One of the Landing Wheels, with tyre removed

Construction of the Main Planes

The construction of the main planes should next be undertaken. Fig. 10 shows the construction of the top left-hand wing, Fig. 9 the complete bottom left-hand wing, whilst Fig. 8 gives the complete right-hand bottom and top wing unit, with engine, bracing wires, and interplane struts.

To describe first the construction of the portions of the dissembled top wing shown in Fig. 10. As will be seen from the illustration it is double surfaced—a feature common to all the wings—each half consisting of six 5½"×3½" Flat Plates and two 5½"×2½" Flat Plates. The Plates 16 are overlapped two holes in the direction of their length and by the same amount in regard to their width. The Plates 17, however, are overlapped one hole in length and three in width. The edges of the 3½"×5½" Flat Plates forming the leading edges of the top and bottom halves are curved slightly, so that when they are bolted together the complete wing has a streamline section as in an actual aeroplane wing. (The profile of the centre section 39, Fig. 2, gives a good idea of the shape that the main planes, in section, should present).

A channel section girder 18, composed of two 12½" Angle Girders, is bolted to either the top or bottom half of the wing, in the fourth row of holes from the leading edge. It will be observed that the end of the Girder projects one hole from the edges of the Plates 16. The various Angle Brackets for the attachment of the interplane struts should be bolted to the bottom half (see Fig. 1 in last month's "*M.M.*," and also Fig. 8 for the correct location of these Angle Brackets), and a ½" loose Pulley is attached to the top half by means of a ½" Bolt that is held in place by nuts on each side of the Plate (see Fig. 1, January "*M.M.*"). The Pulley is free on the bolt, and serves as a guide for the aileron wires.

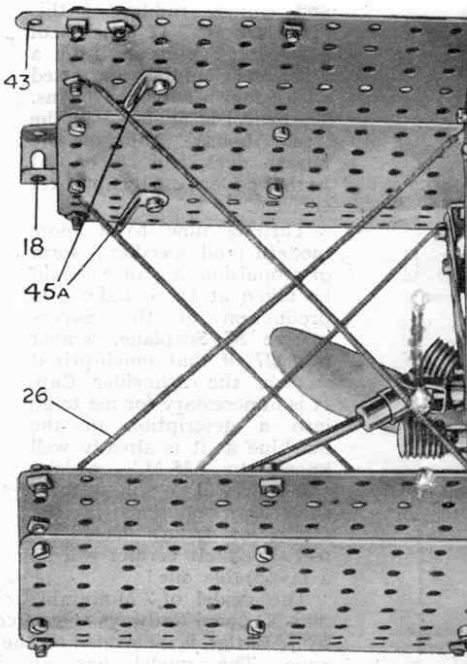

The two halves of the wing may now be bolted together,

Armstrong-Whitworth "Argosy" Type
Passenger Aeroplane

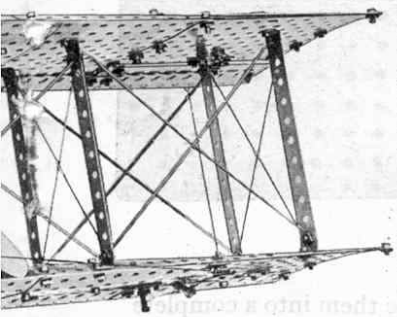

$\frac{3}{8}''$ Bolts being used to draw the leading edges of the Plates together whilst ordinary bolts are used for the trailing edges of the Plates 16. The aileron 19, consisting of four $5\frac{1}{2}''$ Flat Girders, is hung from the trailing edges of the $2\frac{1}{2}'' \times 5\frac{1}{2}''$ Flat Plates 17 by means of Hinges 20. It will be found that when the two halves of the wing are fitted together there is a space between the trailing edges of the Plates 17. Therefore it is necessary to place four Washers—two on each side of the Hinge—on the $\frac{3}{8}''$ Bolt 20a (see also Fig. 10). The Hinge nearest the tip is merely bolted direct to the top of the wing surface.

It should be apparent from the various illustrations that from the end of the $12\frac{1}{2}''$ Angle Girders 18 the upper and lower wing surfaces taper towards the wing tips. In view of this, therefore, the curve on the Plates should gradually diminish toward the wing tips and such bolts that project inside the wings near the wing tips require their shanks to be shortened by placing Washers under their heads. The right-hand top wing is made in a precisely similar manner, of course.

As regards the construction of the lower wings the main features are the same as in the case of the top wings, but each one is only 5″ wide as compared with the 6″ of the top ones: they are also $\frac{1}{2}''$ longer. The upper and lower surface of each bottom wing consists of four $5\frac{1}{2}'' \times 3\frac{1}{2}''$ Flat Plates (Fig. 9) all overlapped one hole, thus giving the extra $\frac{1}{2}''$ in length compared with the top wing. Two $5\frac{1}{2}'' \times 2\frac{1}{2}''$ Flat Plates are bolted to the trailing edges of the $5\frac{1}{2}'' \times 3\frac{1}{2}''$ Plates at one end, overlapping the latter Plates by two holes in width.

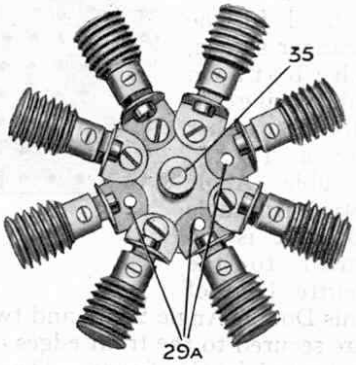

Fig. 6. One of the three Engines

The support 23 for the landing wheel axle consists of a 3″ Strip and a $2\frac{1}{2}''$ Strip, and is attached by $\frac{1}{2}'' \times \frac{1}{2}''$ Angle Brackets to the bottom surface of the wing. The Angle Brackets must be bolted to the wings before the latter are closed up, of course, a fact that should be borne in mind also with regard to the Angle Brackets to which the interplane struts are attached. The loose Pulley 22 is attached by means of a $\frac{1}{2}''$ Bolt in the front row of the holes as shown in Figs. 5, 8 and 9.

The landing wheels each consist of two 2″ Pulleys 65 (Fig. 7) that are held rigidly together by $\frac{1}{2}''$ Bolts and nuts, a Collar on each bolt spacing the Pulleys the required distance apart. The wheels are shod with two 2″ Dunlop Tyres, which are sprung in the groove formed between the two Pulleys in order to make them more secure.

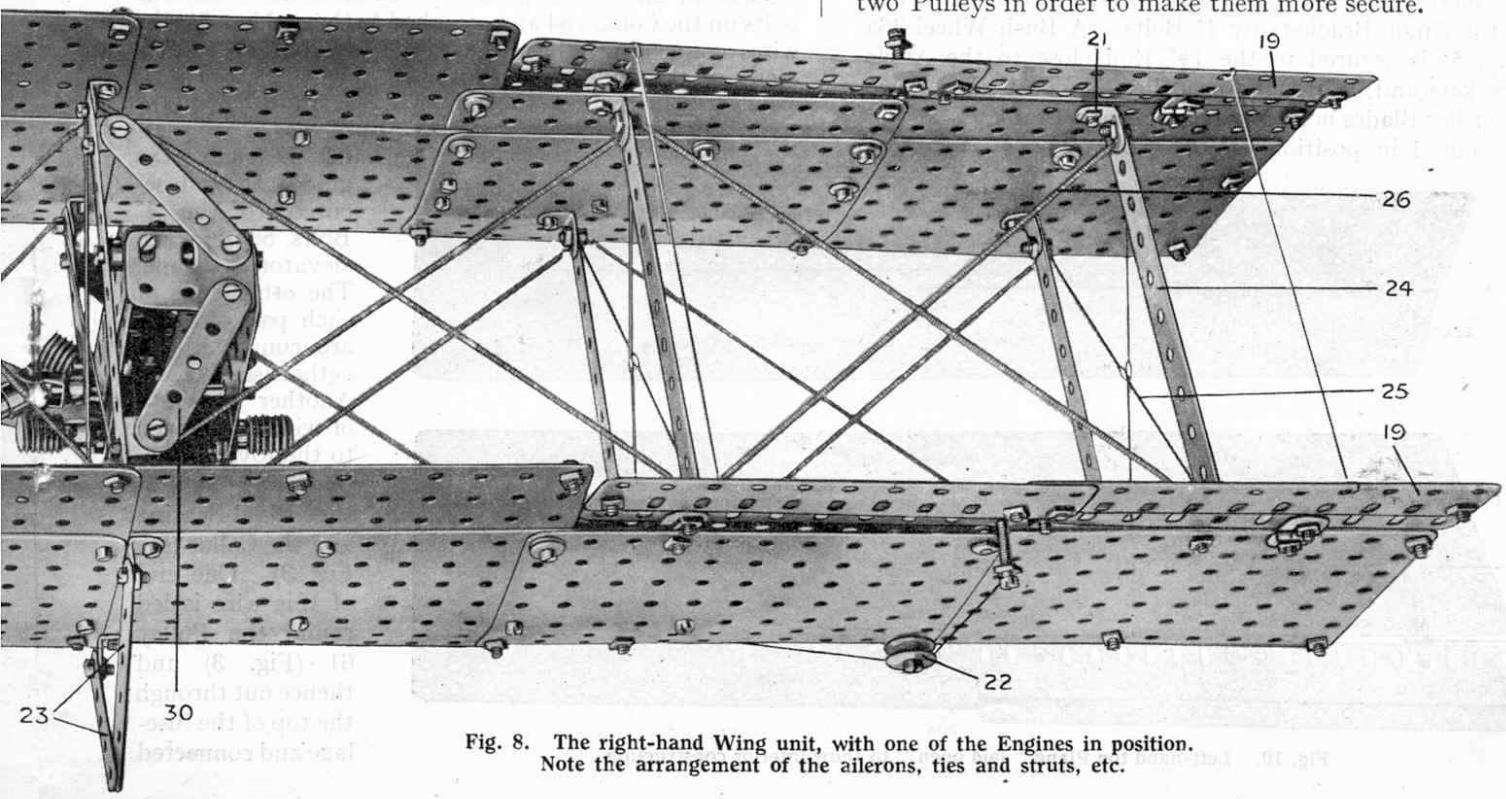

Fig. 8. The right-hand Wing unit, with one of the Engines in position. Note the arrangement of the ailerons, ties and struts, etc.

The Wing Engines

Each wing engine is housed in a nacelle or casing (Fig. 11) which is constructed as follows. The top of the nacelle consists of a $3\frac{1}{2}''$ Flat Girder 27, to the edges of which two $3\frac{1}{2}''$ Angle Girders are bolted. Each side consists of $3\frac{1}{2}''$ Flat Girders arranged in the manner shown, the bottom edges being connected together by a $1\frac{1}{2}'' \times \frac{1}{2}''$ Double Angle Strip. An Angle Bracket is secured to the centre hole of this Double Angle Strip, and two further Angle Brackets are secured to the front edges of the side Flat Girders as indicated in the figure. Three $\frac{3}{8}''$ Bolts 29 are bolted to these Angle Brackets.

The back of the nacelle is formed by a $1\frac{1}{2}''$ Flat Girder attached by Angle Brackets to the top of the nacelle (see Fig. 8). Two $2\frac{1}{2}''$ Strips 30 are attached to the $1\frac{1}{2}''$ Flat Girder, and two 2″ Strips 32 are secured also by Angle Brackets to the front end. The nacelle is attached by the $\frac{3}{8}''$ Bolts 31 to the $5\frac{1}{2}''$ Strips 24 that form two of the interplane struts, two Washers being placed on each bolt for spacing purposes.

The 2″ Rod 33 is journalled in the Flat Girders composing the sides of the nacelle, and carries a $\frac{7}{8}''$ Bevel 34, which is intended to mesh with a second Bevel that is secured to a $1\frac{1}{2}''$ Rod journalled in the centre hole of the Bush Wheel 35 (Fig. 6). Eight Angle Brackets are arranged round the periphery of the Bush Wheel and carry the Worms representing the cylinders, which are attached to the Angle Brackets by $\frac{3}{8}''$ Bolts. A Bush Wheel 36a (Fig. 5) is secured to the $1\frac{1}{2}''$ Rod close to the Angle Brackets and, lastly, the propeller 36, consisting of two Propeller Blades bolted to a Double-arm Crank, is secured in position on the Rod. The $\frac{3}{8}''$ Bolts 29 bolted to the Angle Brackets on the nacelle are passed through the holes 29a in the Bush Wheel 35, nuts holding the latter in place. The left-hand wing engine nacelle is shown in Fig. 11; the other for the right-hand wing is exactly similar.

Having made all the wings and also the two engine nacelles it remains only to assemble them into a complete unit as shown in Fig. 8. The interplane struts 24 are attached to the Angle Brackets 21 by nuts and bolts, the latter serving also to secure the various "bracing wires." The Loom Healds 25 prevent fore and aft movement of the struts, whilst the Spring Cord 26 is intended to brace the planes in a vertical direction. The complete unit should now appear as in Fig. 8.

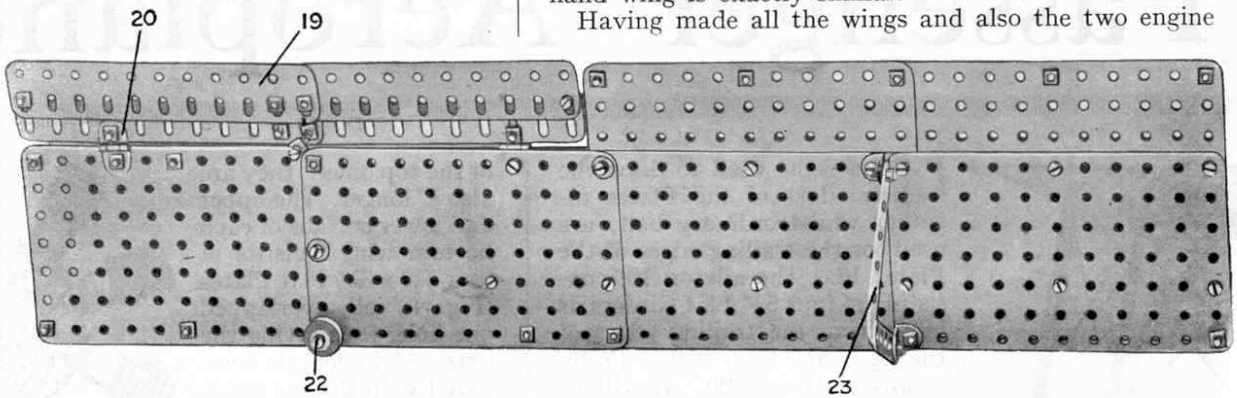

Fig. 9. Underside view of the left-hand bottom Plane

Erecting the Model

Having completed the various portions of the model it remains now to erect them in their respective positions. The first step is to attach the tail unit to the fuselage. It is bolted firmly to the Angle Brackets on the ends of the Strips 9 and to the Angle Brackets 10 at the end of the fuselage (Fig. 2) and should appear as in Fig. 1. Two wires 55 are now fixed to the rudder bar (one at each end), led along inside the fuselage for some distance, and then passed out through each side. They are taken round the bolts on the Collars 54 and attached to the rudders 51, the wires connecting all three together so that the movement of the rudders synchronise.

Short lengths of wire 57 are passed through the guides 58 and secured to the $\frac{3}{4}''$ Bolts 56 on each elevator plane. The other ends of each pair of wires are connected together (see Fig. 1). Another length of wire is clamped to the joystick between the boss of the Swivel Bearing and the Collar (see Fig. 3). One end of this wire is led round the Pulley 61 (Fig. 3) and thence out through the top of the fuselage and connected

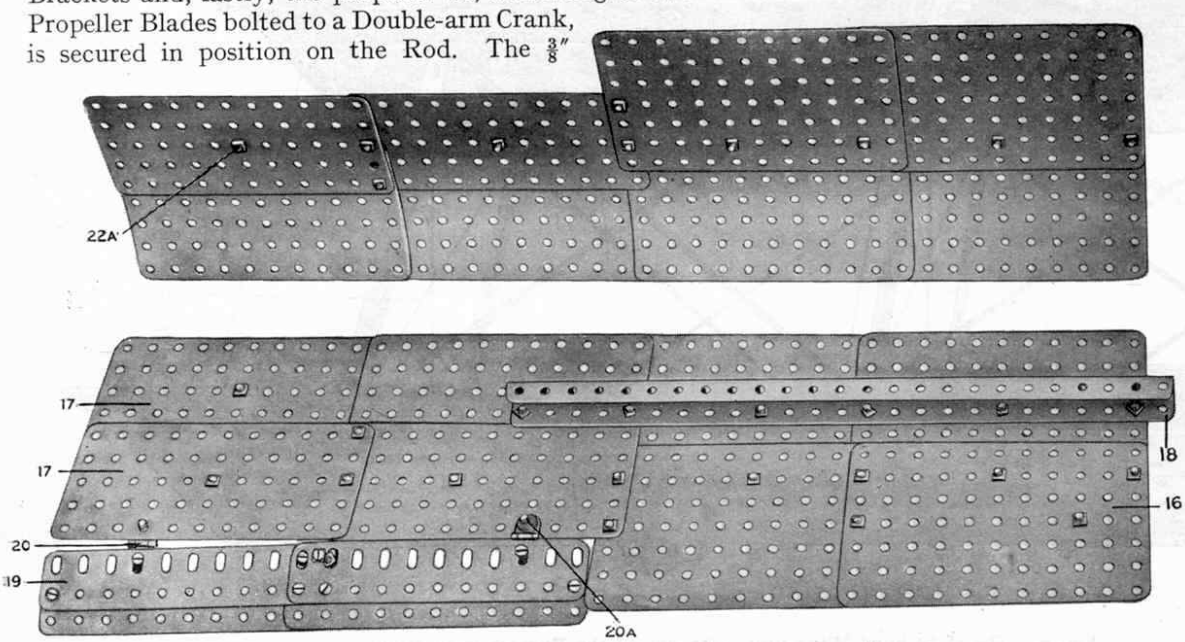

Fig. 10. Left-hand top Plane "laid open" to show interior construction

to the wire yoke 57 of the upper elevator (see Fig. 1), while the other end is taken directly to the yoke of the lower elevator. If the length of the wire 57 is adjusted correctly by means of "strainers" the elevators will rise and fall in accordance with the movements of the joystick. The elevators cause the actual machine to rise or dip whilst the rudders direct its course to left or right.

Attaching the Wing Units to the Fuselage

Each bottom wing has two $\frac{1}{2}'' \times \frac{1}{2}''$ Angle Brackets bolted to its upper surface at the end nearest the side of the fuselage. These Brackets are slipped on to the $\frac{3}{8}''$ Bolts 66 bolted to the side of the fuselage (see Figs. 2 and 5). The projecting end of the Girder 18 (Fig. 8) should now be pushed into the centre section so that the Girder 18 is in line with the Girder 40 (Fig. 2), and the holes in the Girder 18 in line with those in the Plates 39 in order that a 1" Threaded Rod 18a (Fig. 1) may be passed through the holes. The Threaded Rod is retained in place by nuts on its ends. The trailing edge of each wing is connected to the Flat Girder 41 of the centre section by the Strip 43 (Fig. 8), and the ends of the Strips 45 bolted to the Angle Brackets 45a (Figs. 2, 5 and 8).

The ends of the landing wheel axles 11a are supported in the Strips 23: the landing wheels are placed on the ends of the axles and retained in place by Collars.

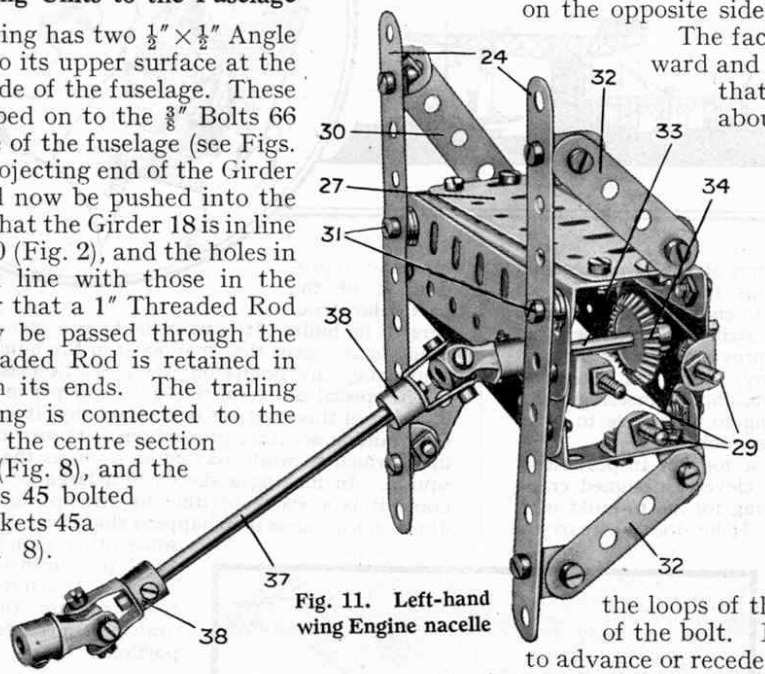

Fig. 11. Left-hand wing Engine nacelle

Fixing the Aileron Controls

Having made quite certain that the wings are attached securely to the fuselage, the next step is to connect up the ailerons with the joystick.

The top wing ailerons are connected together by a length of wire 70 (Fig. 1) that is attached to $\frac{3}{4}''$ Bolts secured to the trailing edges of the ailerons and passed round the $\frac{1}{2}''$ Pulleys on the top surface of the wings. The length of the wire is so adjusted by means of a "strainer" that it is taut when both ailerons are perfectly level in relation to the main plane surface and therefore parallel to each other.

The upper ailerons are connected by short lengths of wire 70 to the lower ailerons, to transmit the motion of the former to the latter. The length of these wires must be such that the upper and lower ailerons are parallel with one another.

A further length of wire 70 is attached to the bolt held in the end of the Coupling 62 (Fig. 3) and its ends are passed through the holes in the side Plates of the fuselage. Thence they are led round the Pulleys 22 on the bottom wing (Fig. 8) and fastened to the $\frac{3}{4}''$ Bolts that are bolted to the under surfaces of the lower ailerons. The length of the wires must be so adjusted by means of the strainers incorporated in each of them, that when the joystick is in a vertical position, the ailerons are level with the main plane surfaces. Therefore any side-to-side movement of the joystick should result in an up and down movement of the ailerons—those on one side of the machine moving downward whilst those on the opposite side move upward simultaneously.

The fact that one aileron is inclined downward and the other upward produces a couple that tends to roll the actual machine about its longitudinal axis. This is known as "banking," a manœuvre that is necessary when turning the machine in either direction. It is also necessary to operate the ailerons frequently while the machine is in flight, in order to maintain equilibrium and counteract sudden gusts of wind, etc.

Mention has been made of "strainers" incorporated in the various control wires to adjust their length, and hence their tension, very minutely. To make a suitable strainer, the control wire requiring such an addition is cut and a loop made on each of the cut ends. A $\frac{1}{2}''$ Bolt is passed through the loops of the wire and a nut placed on the end of the bolt. By turning the bolt the nut is made to advance or recede up the shank of the bolt, so altering the tension of the control wire.

Thin wire obtained from any ironmongers or stores for an inconsiderable sum is used for all the control wires on this model. Meccano Cord is not suitable, as it stretches considerably and would prevent satisfactory working of the model. Meccano No. 27 S.W.G. Bare Iron Wire (part No. 312) could be used very easily, however.

Driving the Wing Engines

To connect up the drive from the Electric Motor to the wing engines, the Universal Couplings 38 (Fig. 11) are secured to each end of the Rod 13 (Figs. 2, 5). All three propellers are driven at the speed of the armature of the Motor, as the ratio existing between the various gears is unity. The Couplings 38 should be adjusted carefully so that the propellers turn quite freely.

Two terminals 67 are provided on the bottom of the fuselage (see Fig. 2) to form a convenient means of attaching the leads from a 4-volt Meccano Accumulator. The shanks of the terminals are 6 B.A. Bolts (part No. 304) secured to and insulated from the fuselage by 6 B.A. Nuts (part No. 305) with Insulating Bushes and Washers (parts Nos. 302 and 303). The terminals are connected to those on the Motor by short lengths of wire.

Parts required to build the Three-Engine Biplane :

6 of No. 1	12 of No. 8	2 of No. 15A	6 of No. 30	2 of No. 48A	2 of No. 82	7 of No. 103K	2 of No. 303
2 „ „ 1A	4 „ „ 9B	3 „ „ 16	2 „ „ 31	46 „ „ 52A	12 „ „ 101	9 „ „ 111	2 „ „ 304
14 „ „ 2	4 „ „ 9D	2 „ „ 16A	24 „ „ 32	15ft. „ „ 58	18 „ „ 103	3 „ „ 111A	2 „ „ 305
2 „ „ 3	2 „ „ 9F	1 „ „ 16B	489 „ „ 37	8 „ „ 59	2 „ „ 103A	56 „ „ 111C	2 „ „ 306
6 „ „ 4	12 „ „ 10	2 „ „ 17	74 „ „ 37A	5 „ „ 62B	4 „ „ 103B	20 „ „ 114	8 „ „ 312
20 „ „ 5	6 „ „ 11	3 „ „ 18A	2 „ „ 37B	3 „ „ 63	11 „ „ 103D	2 „ „ 126A	
18 „ „ 6	86 „ „ 12	4 „ „ 20A	42 „ „ 38	22 „ „ 70	4 „ „ 103F	4 „ „ 140	1 Electric
10 „ „ 6A	2 „ „ 13A	5 „ „ 23	6 „ „ 41	5 „ „ 72	5 „ „ 103G	1 „ „ 165	Motor
4 „ „ 7A	1 „ „ 14	6 „ „ 24	3 „ „ 48	3 „ „ 76	3 „ „ 103H	2 „ „ 302	