A Fine New Meccano

Another Mechanical Wonder th

FROM times beyond memory the roundabout has been a source of pleasure to young people. The progress of civilisation has changed it, of course, as it has changed almost everything else, and it is difficult to recognise the huge whirling structures of to-day as the direct descendants of the creeking contraption which, at the instance of a perspiring operator, was induced to revolve slowly with its load of half-a-dozen children. Yet from this humble source have sprung all the hurtling dragons, flying boats, and similar ingenious devices with which our modern fairs are provided.

In its original form, however, with a few alterations such as increased size and the use of steam or electric power, the old favourite is as popular as ever, and it is a poor fair that does not boast an old-fashioned roundabout. Young people who, having attained the mature age of sixteen or seventeen, are restrained by an over-burdening sense of responsibility from taking part in the general "fun of the fair," often yield to the temptation to bestride a glorified quadruped bearing the somewhat fanciful inscription "Sally" or "Dobbin," and even staid old men who, if they have smiled at all during the last ten years, do not betray the fact by their faces, have been known to cast dignity to the winds and take a ride "for old times' sake." Modern amusement devices cannot completely oust from our fairs the old-fashioned roundabout.

The Meccano Roundabout is an excellent example of the adaptability of the Meccano system. The different movements, which include the rotating superstructure, the revolving cars, and the leaping horses, are all faithfully reproduced as in the prototype of the model, and its appearance when working gives an effect of realism that can only be fully appreciated by those who have actually seen the model in operation.

The base of the roundabout (Fig. 5) is built of two $24\frac{1}{2}''$ Angle Girders joined by nine $12\frac{1}{2}''$ Angle Girders 1, 2, 3, 4. A $5\frac{1}{2}'' \times 2\frac{1}{2}''$ Flat Plate 5, bolted to the Girders 3, carries two Trunnions joined by a $2\frac{1}{2}'' \times 1''$ Double Angle Strip 6, which, together with the Plate 5, provides bearings for a short Axle Rod carrying a 1" Sprocket Wheel 7 and a special-toothed wheel 8.

Fig. 2. Detail view of Revolving Car

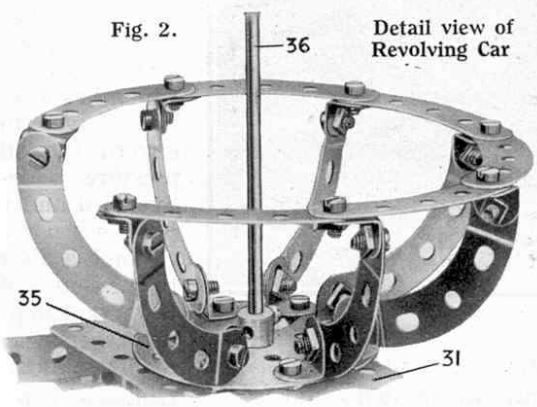

The Roller Bearing

The large Geared Roller Bearing, on which the whole of the superstructure rotates, has only just been added to the Meccano system. It may be purchased as a complete self-contained unit under part No. 167 (see page 684 of this issue).

The $\frac{3}{4}''$ Flanged Wheels included in the Roller Bearing unit are journalled on the Pivot Bolts, which are secured

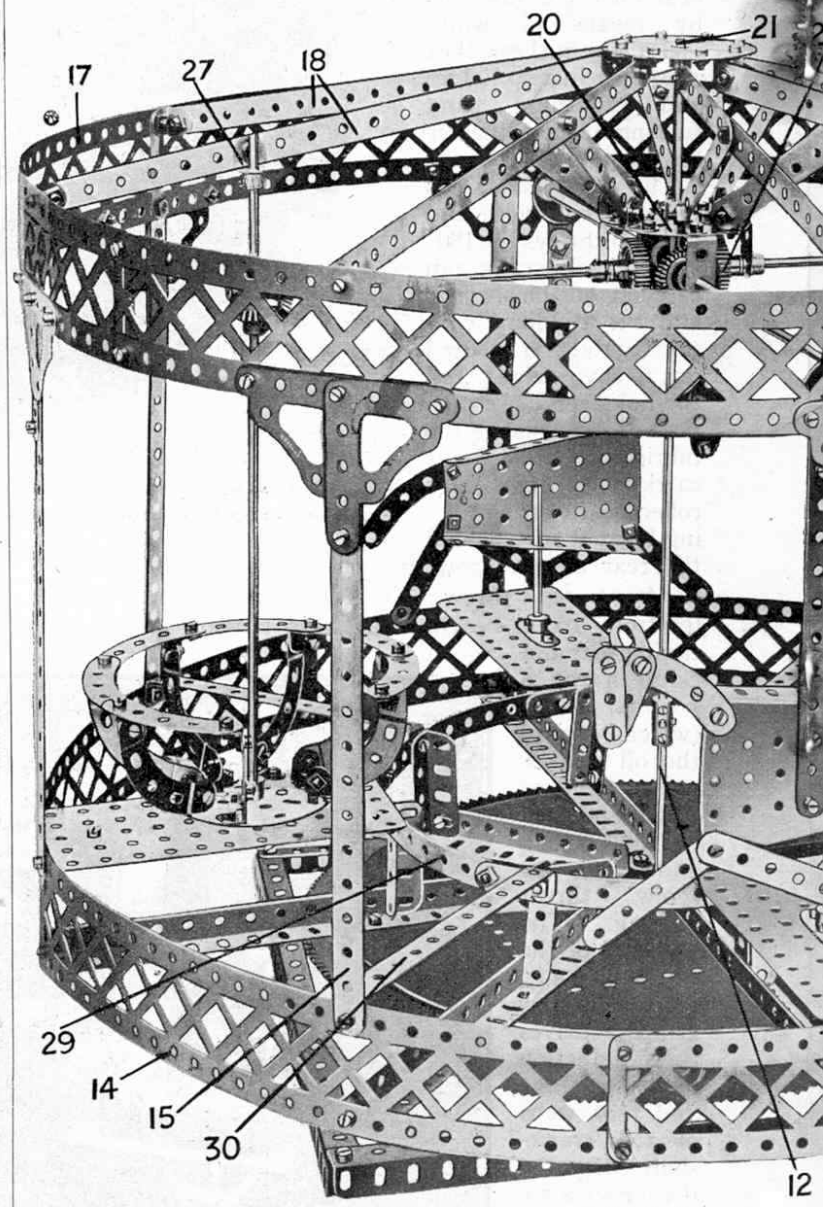

round the outer edge of the Ring Frame, and the latter is inserted between the two Roller Races so that the Flanged Wheels run smoothly on a shoulder near the edge of the lower Race 9, which is bolted to the Girders 2, while the upper Roller Race, by means of a similar shoulder resting on the $\frac{3}{4}''$ Flanged Wheels, revolves easily, yet steadily, about the Axle Rod 12. In this way no points in the moving surfaces are allowed to be in

o Model: Roundabout

that will provide Hours of Fun

sliding contact with each other; hence friction is reduced to a minimum. The Rod 12 is secured rigidly in the boss of a Bush Wheel that is bolted to the lower Roller Race 9, and passes through another Bush Wheel secured to the centre of the upper Roller Race. The set-screw of the latter Bush Wheel should be removed so that the upper Race is quite free to revolve about the Rod 12.

If the parts are not available the special Geared Roller Race may be substituted by roller bearings built up from Channel Segments and other existing parts. Roller Bearings of this type are described in the "Standard Mechanisms Manual" (see detail No. 101) and upon referring to this book, their construction should be quite clear. If the built-up bearings are adopted the following parts will be required in place of part No. 167: 8 of No. 2a; 8 of No. 3; 8 of No. 9a; 16 of No. 12b; 8 of No. 16a; 8 of No. 20; 76 of No. 37; 16 of No. 38; 8 of No. 48; 8 of No. 59; 3 ft. of No. 94; 2 of No. 109; 16 of No. 119; 8 of No. 125.

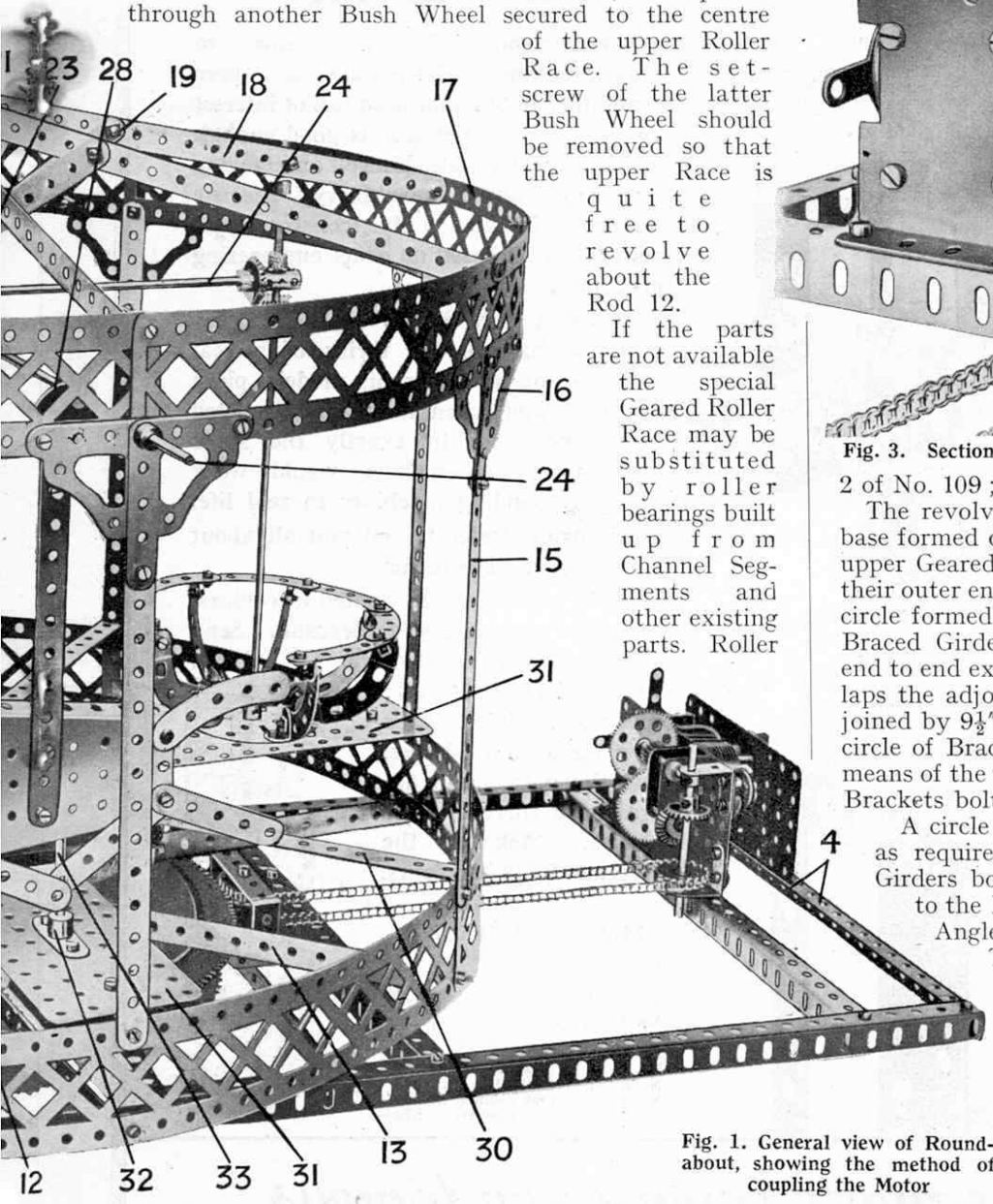

Fig. 1. General view of Roundabout, showing the method of coupling the Motor

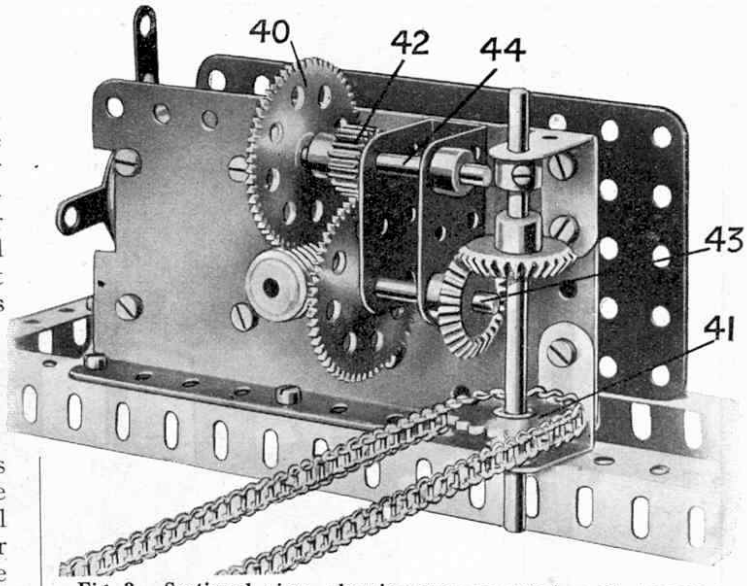

Fig. 3. Sectional view, showing gears mounted on Electric Motor

The revolving portion of the model is built on to a base formed of eight $9\frac{1}{2}''$ Angle Girders 13 bolted to the upper Geared Race 9 of the Roller Bearing and having their outer ends secured by means of Angle Brackets to a circle formed of five $12\frac{1}{2}''$ Braced Girders and one $5\frac{1}{2}''$ Braced Girder (Fig. 1). These Girders are all bolted end to end except the $5\frac{1}{2}''$ Girder, one end of which overlaps the adjoining $12\frac{1}{2}''$ Girder by three holes, and are joined by $9\frac{1}{2}''$ Strips 15 and Architraves 16 to a similar circle of Braced Girders 17, connected in their turn by means of the $9\frac{1}{2}''$ Strips 18 and the $3\frac{1}{2}''$ Strips 19 to Angle Brackets bolted to two Face Plates 20 (see Figs. 1, 6).

A circle composed of six $5\frac{1}{2}''$ Strips 29, overlapped as required, is carried on eight vertical 2" Angle Girders bolted to the Girders 13, and is connected to the Braced Girders 14 by four $5\frac{1}{2}'' \times \frac{1}{2}''$ Double Angle Strips 30.

The bosses of the Face Plates 20 form journal bearings for an $11\frac{1}{2}''$ Axle Rod 21 to which is secured a Contrate Wheel 22 (Fig. 6) that engages the teeth of the four 1" Gear Wheels 23 on the Rods 24. The Axle Rod 21 is extended by means of a Coupling 25 and the short Rod 12, which is secured in the boss of the lower Geared Race of the Roller Bearing, so that the Contrate Wheel 22 remains immovable, and the

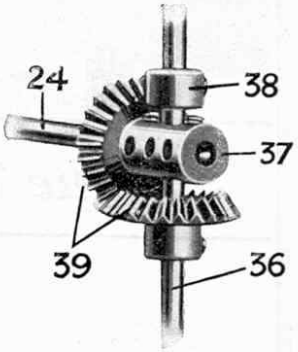

Fig. 4. Bevel Gearing operating revolving cars

revolving structure causes the Gear Wheels 23 to travel around the Wheel 22, at the same time rotating about their own axes and operating the jumping horses and revolving cars.

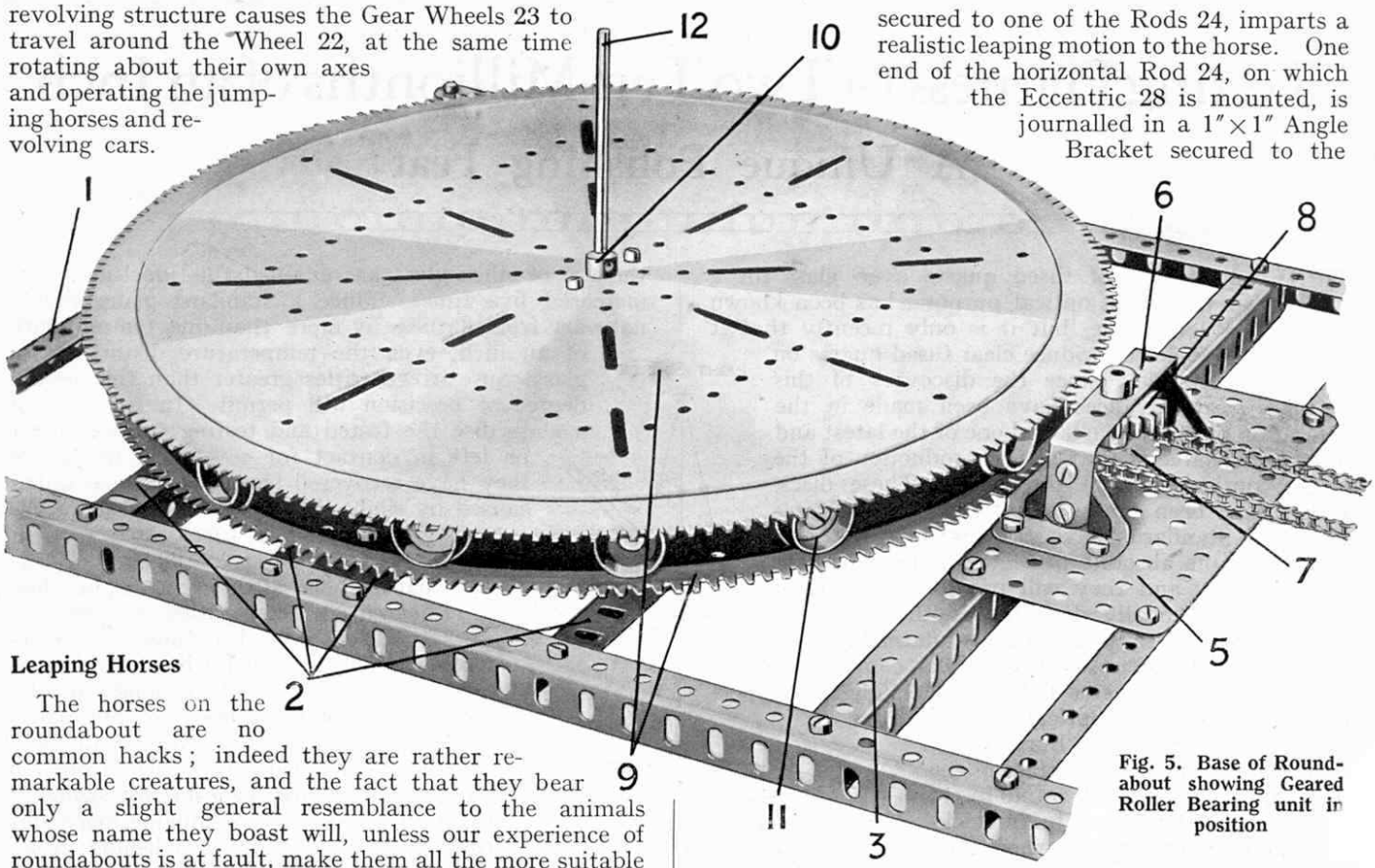

Fig. 5. Base of Roundabout showing Geared Roller Bearing unit in position

Leaping Horses

The horses on the roundabout are no common hacks; indeed they are rather remarkable creatures, and the fact that they bear only a slight general resemblance to the animals whose name they boast will, unless our experience of roundabouts is at fault, make them all the more suitable for incorporation in this model. The body of each horse, as will be seen from Fig. 7, consists of a Sector Plate, and is provided with a tail (a $2\frac{1}{2}''$ large radius Curved Strip) and four $2\frac{1}{2}''$ Strips representing legs. The passenger is expected to sit astride the horse immediately behind the supporting Strip. During "rush hours" no doubt an extra passenger could be squeezed in between the front of the supporting Strip and the horse's neck. The gracefully arched but rather ill-nourished neck may be distinguished from the tail by the fact that it bears a shapely head (two $1\frac{1}{2}''$ Strips) surmounted by a Flat Bracket with which the poor beast must do his best to hear.

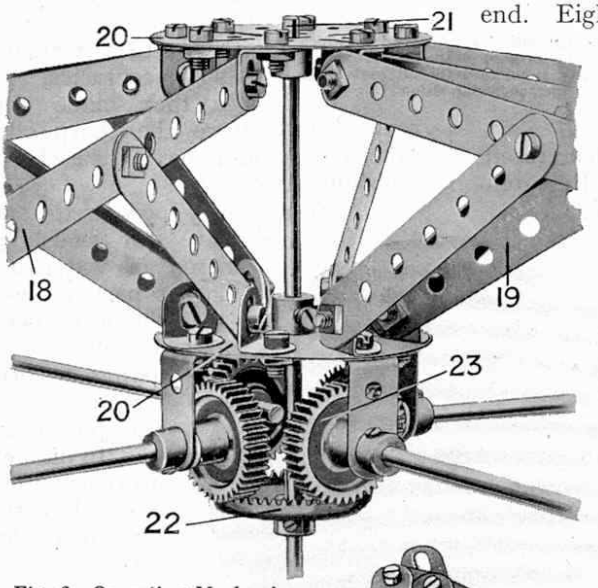

Fig. 6. Operating Mechanism at top of main stem

Each of the horses is carried on a $5\frac{1}{2}''$ Strip bolted to a Single Throw Eccentric* 28, which, secured to one of the Rods 24, imparts a realistic leaping motion to the horse. One end of the horizontal Rod 24, on which the Eccentric 28 is mounted, is journalled in a $1'' \times 1''$ Angle Bracket secured to the lower of the Face Plates 20, while the Braced Girders 17 and the Architraves 16 provide a bearing for the opposite end. Eight $9\frac{1}{2}''$ Strips 15 are used to space the upper and lower Braced Girders apart.

A $5\frac{1}{2}'' \times 2\frac{1}{2}''$ Flat Plate 31 is bolted to the Girders 14 and the Strips 29 by means o Angle Brackets, and carries a Double Arn Crank 32, in the boss of which is secured 3″ Rod 33 acting as a vertical guide for th leaping horse. The Rod 33 passes through th lower flange of the Sector Plate forming th body of the horse. This arrangement i identical for both horses, as can be see in Fig. 1.

Revolving Cars

Each revolving car (Fig. 2 comprises a Face Plate 35 to which seven $2\frac{1}{2}$ small radius Curve Strips are affixed b means of Angle Brackets. Six $2\frac{1}{2}''$ large radius Curved Strips attached to the upper ends of the small radius Strips form an arm rest for the occupants of the car.

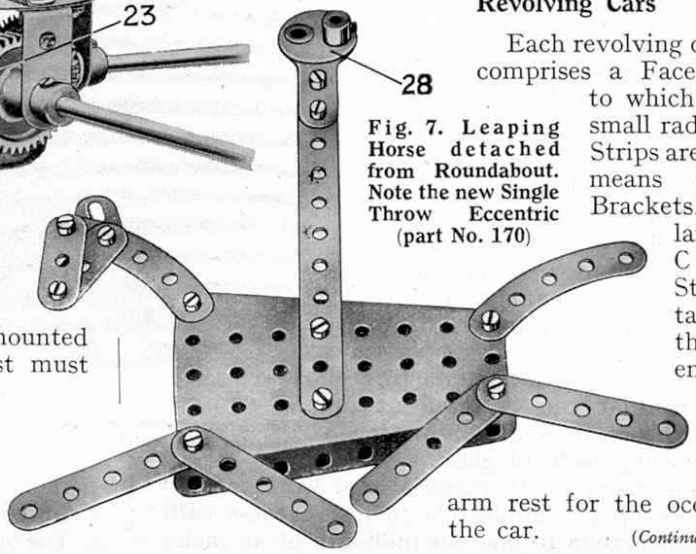

Fig. 7. Leaping Horse detached from Roundabout. Note the new Single Throw Eccentric (part No. 170)

(Continued on page 684)

* *The Single Throw Eccentric (part No. 170) is a new addition to the Meccano system. It gives a total reciprocating movement of ½″ and will be found useful where the Triple Throw Eccentric (part No. 130) is too cumbrous. Price 9d.*

New Meccano Parts

Three Important Additions to the System

No. 167, Geared Roller Bearing

PART No. 167 comprises the following units: two Roller Races, each 12″ diam. and dished to form a rim near their peripheries; one Ring Frame, 10″ diam.; one special Pinion, 16 teeth; sixteen ¾″ Flanged Wheels; sixteen Pivot Bolts and Nuts; two Bush Wheels; one 9½″ Strip; one 1½″ Rod; ten nuts and bolts. When assembled these parts form a complete Roller Bearing.

The Meccano Roller Bearing is designed to facilitate the building of large models of swivelling structures, such as giant Hammerhead Cranes, Rolling Bridges, etc. The Roller Races are provided with teeth around their peripheries, so that they may be engaged by the special Pinion. In this way a realistic and efficient means of rotating the superstructure is provided.

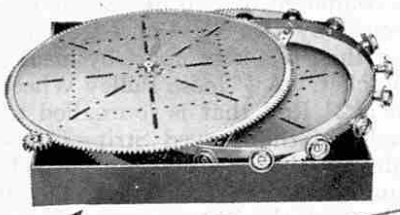

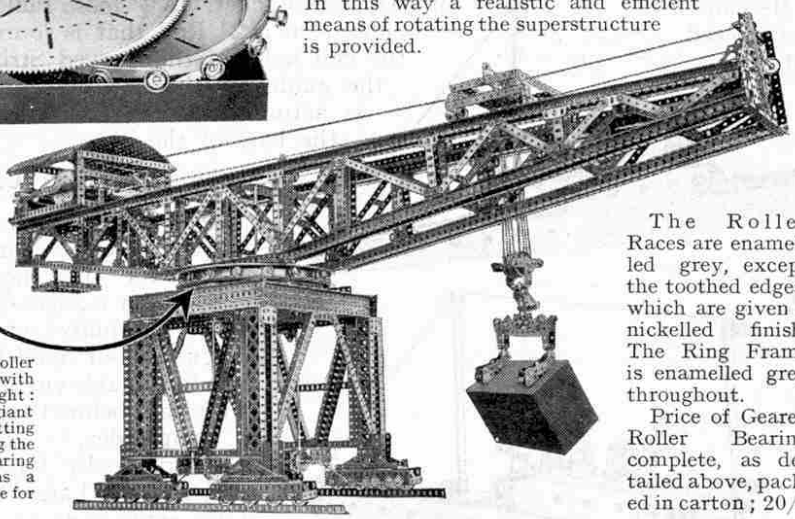

Above: The complete Roller Bearing unit, with box. On Right: A Meccano giant Block - setting Crane, showing the Roller Bearing Unit used as a swivelling base for the boom.

The Roller Races are enamelled grey, except the toothed edges, which are given a nickelled finish. The Ring Frame is enamelled grey throughout.

Price of Geared Roller Bearing complete, as detailed above, packed in carton; 20/-

The components of the Geared Roller Bearing may be obtained separately. Certain of them are entirely new parts; these will be listed as follows:—

Part No. 167a, Roller Race, price 4/6. Part No. 167b, Ring Frame for Rollers, price 3/-. Part No. 167c, Pinion for Roller Bearing, price 1/-.

The remaining components are included already in the Meccano Parts List.

No. 168, Ball Bearing

Part No. 168 comprises the following units: one Ball Race Flanged, one Ball Race Geared, and one Ball Casing, complete with Balls. The over-all diameter of the part is 4″. It is designed for use in models of swivelling structures where the Roller Bearing (part No. 167) would be too large. Its use reduces friction to a minimum and enables the moving part to be turned easily and smoothly about its pivot. The Flanged and Geared Ball Races are enamelled green, and the Ball Casing is nickel-plated throughout. Price, complete, 3/-.

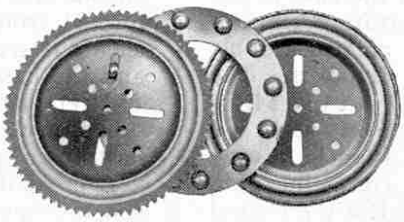

The components of the Ball Bearing will be listed separately, as follows:—

No. 168a, Ball Race, Flanged, price 6d.
No. 168b, Ball Race, Geared, price 9d.
No. 168c, Ball Casing, complete with Balls, price 1/9.

No. 169, Digger Bucket

This is a very useful and realistic accessory. It is designed principally, of course, for use in Meccano steam shovels, or mechanical navvies, etc. The mouth of the Bucket measures about 1⅞″ by 2¼″, while the depth (over cutting teeth) is 2½″. The bottom of the Bucket is mounted on hinged levers and normally is held in place by a sliding lever, the end of which may just be seen in the illustration, that engages with a slot in the front of the Bucket. A cord may be attached to the lever and on pulling this the floor falls open and so discharges the contents of the Bucket.

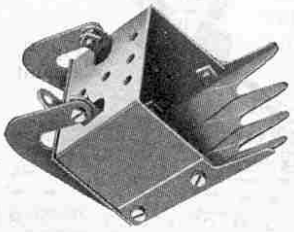

The Digger Bucket is of very sturdy construction, the principal parts being secured together by nuts and bolts. It is beautifully enamelled in steel blue, except for the sliding lever, which is nickel-plated. Price 2/-.

Meccano Model Roundabout—

(*Continued from page* 667)

An 11½″ Axle Rod 36, held in the boss of the Face Plate, is journalled in bearings consisting of the 5½″×2½″ Flat Plate 31 and an Angle Bracket 27 bolted to one of the 9½″ Strips 18. This Rod 36 passes through the central transverse hole of a Coupling 37, in the longitudinal bore of which is journalled one end of the Rod 24. The Rod 36 is supported in the Coupling 37 by a fixed Collar 38, and carries a second fast Collar between the Face Plate 35 and the Flat Plate 31.

The Rods 24, 36 carry ¾″ Bevel Gears 39 that are in continuous engagement with each other. The 1″ Gear Wheels 23, rolling around the teeth of the Contrate Wheel 22, rotate the Axle Rods 24, and thus set the cars in motion.

Arrangement of the Gearing

A Worm Wheel secured to the armature spindle of the Electric Motor (see Fig. 3) meshes with a 57-teeth Gear Wheel 40 on the Rod 44, to which is also secured a ½″ Pinion 42 that engages a second 57-teeth Gear Wheel on the Rod 43. The drive is then led via a pair of ⅞″ Bevel Gears to a 1″ Sprocket Wheel 41, which is connected by an endless Sprocket Chain to the 1″ Sprocket Wheel 7 (Fig. 5). The special 1″ Pinion 8 is secured to the same Rod as the Sprocket Wheel 7, and by turning the upper Geared Race of the large Roller Bearing causes the platform and superstructure of the roundabout to revolve about the Rods 12, 21.

It should be noted that the gearing just described was designed for use with the Meccano high-voltage Electric Motor, and is unsuitable for the 4-volt type. The latter is, however, quite powerful enough to operate the model at a considerable speed, and if it is desired to make use of the low-voltage Motor it is only necessary to omit the ½″ Pinion 42 and the gears on the Rod 43, adding a ⅞″ Bevel Gear on the end of the Rod 44 to mesh with a similar Bevel Gear on the vertical Rod that carries the Sprocket Wheel 41.

Parts required :—

17	of	No. 1A	1	of	No. 16B	5	of	No. 70
8	„	„ 2	1	„	„ 18A	16	„	„ 90
8	„	„ 3	2	„	„ 24	14	„	„ 90A
8	„	„ 5	1	„	„ 26	2′	„	„ 94
4	„	„ 6A	2	„	„ 27A	2	„	„ 96
2	„	„ 7	6	„	„ 30	10	„	„ 99
7	„	„ 8	1	„	„ 30C	2′	„	„ 100
8	„	„ 8A	4	„	„ 31	16	„	„ 108
8	„	„ 9E	1	„	„ 32	4	„	„ 109
2	„	„ 10	288	„	„ 37	2	„	„ 126
62	„	„ 12	8	„	„ 38	4	„	„ 126A
6	„	„ 12A	1	„	„ 48A	2	„	„ 130
5	„	„ 13	8	„	„ 48D	1	„	„ 160
2	„	„ 14	2	„	„ 54	1	„	„ 167
1	„	„ 15A	12	„	„ 59	1 Electric Motor		
2	„	„ 16	2	„	„ 62B			
1	„	„ 16A	3	„	„ 63			

Meccanograph Competition

Many interesting entries were received in the Overseas Section of the Meccanograph Design Contest. The principal prize-winners are as follows:—

First Prize (Meccano products to value £1-1s.): Kenneth P. Bland, Kingston, Jamaica. Second Prize (Meccano products to value 15/-): B. W. Monk, Adelaide, S. Australia. Third Prize (Meccano products to value 10/6): O. P. Olivant, Madras, India. Fourth Prize (Meccano products to value 5/-): C. J. Boeljon, Amsterdam, Holland. In addition, a number of Certificates of Merit have been awarded.

The designs submitted were all of a very high standard of merit, but comparatively few competitors made important alterations to the standard Meccanograph model.