Among the Model-Builders

By "Spanner"

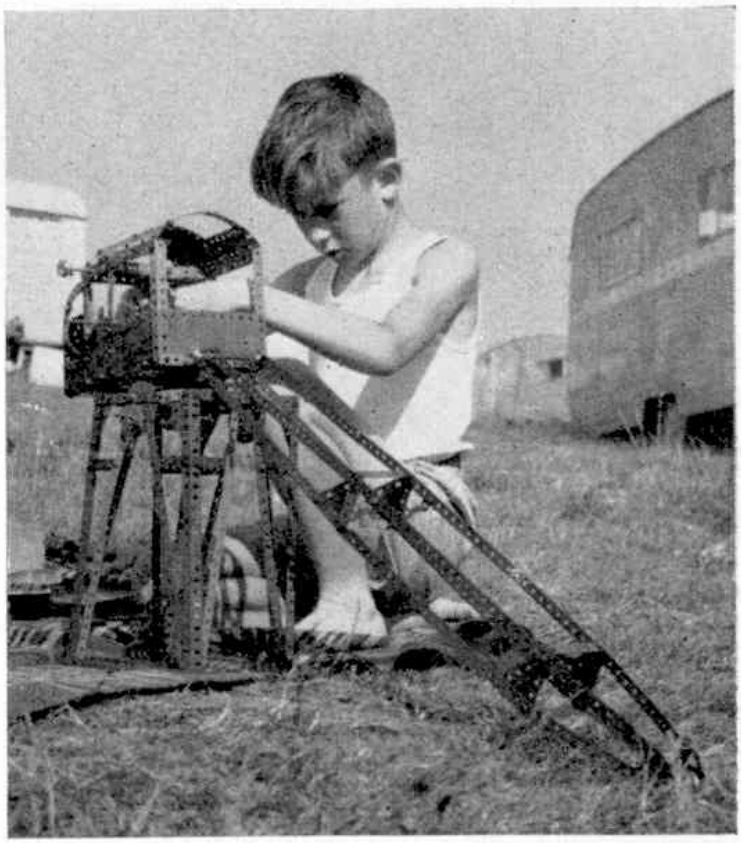

Even when on holiday young David Scott, Leyton, E.10, finds time to enjoy Meccano model-building. Here he is seen at work on a model while enjoying the sunshine during a Caravan holiday last year.

Forward and Reverse Gear-Box

The gear-box seen in Fig. 1 is contained within a framework that consists of two $2\frac{1}{2}'' \times 1''$ Double Angle Strips 1 and 2 connected by a $3\frac{1}{2}''$ Strip on one side and by a 3″ Strip on the other side.

A 4″ Rod 3 is journalled in the centre holes of the Double Angle Strips 1 and 2. The friction clutch 4 consisting of a 1″ Pulley Wheel with Rubber Ring, is fixed on this Rod, as is the Contrate Wheel 5. The 57-tooth Gear 6 and another friction clutch 7, consisting of a 1″ Pulley with Rubber Ring, are fixed in a Socket Coupling, which is free to turn on the Rod 3. An eight-hole Wheel Disc 9 is fixed to a $1\frac{1}{2}''$ Contrate Wheel 16 by means of two $\frac{1}{2}''$ Bolts, and is also free to turn on the Rod 3. The two Pinions 10 and 11 are free to turn on $\frac{3}{4}''$ Bolts held in the frame.

A 1″ Rod 12 engages in the groove of the Socket Coupling and is used to slide the Coupling backwards and forwards on the Rod 3. It is moved by means of the 2″ Rod 13, which is fixed in a Coupling mounted on the end of a $3\frac{1}{2}''$ Rod journalled in the two $2\frac{1}{2}''$ Flat Girders 14 and 15.

The drive is passed through the gear-box by means of Gear 6. When the Rod 13 is moved backwards, this Gear is forced against clutch 4 fixed to Rod 3. The result is that the $1\frac{1}{2}''$ Contrate Wheel 16 revolves idly on the shaft and the drive is transmitted through Gear 6. When the lever 13 is pushed forwards the Rubber Ring on clutch 7 transmits a reverse drive through the Contrate 6, Pinions 10 and 11 and the Contrate 5.

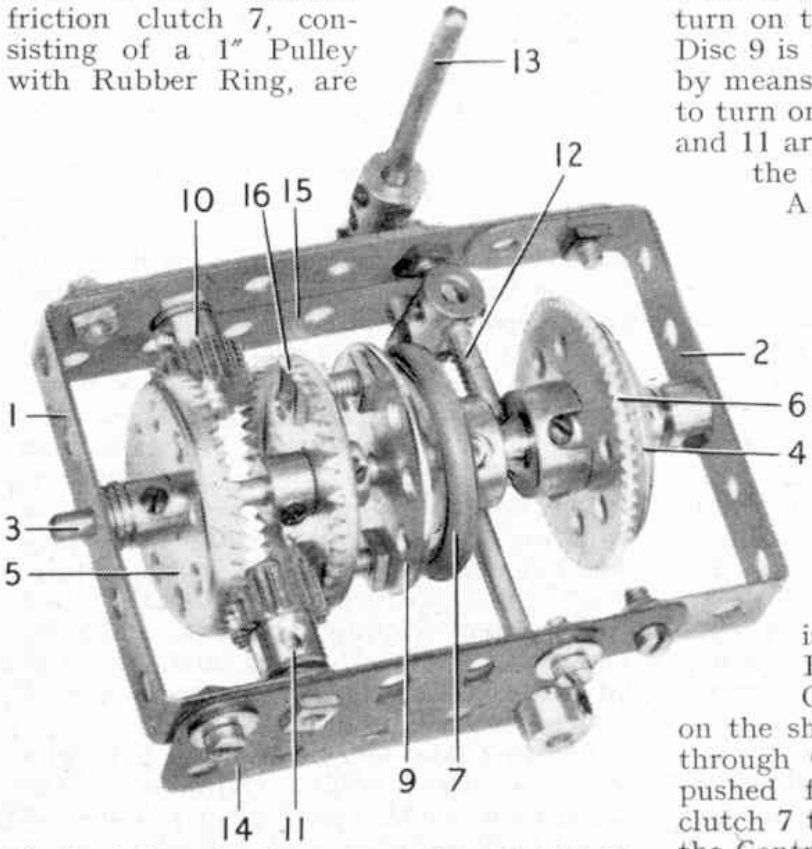

Fig. 1. A forward and reverse gear-box of a simple and unusual type.