Designed especially for Meccano Magazine, by Ray Malmstrong, this unusual pusher-type, rubber powered model is robust and very easy to build . . .

BUILD the MARQUITA

IF you are looking for a model aeroplane that combines simplicity of construction with a good flying performance and one which will attract a lot of attention when you take it on to the flying field, then the Marquita is definitely *your* model. It is a pusher-type aircraft and is certainly an out-of-the-rut model to make. Materials for building are cheap and easily obtainable from your local aeromodelling or hobby shop and construction takes only a few evenings.

The plan given overleaf is full size and, because I want to give you some fairly detailed flying notes, I am keeping the written building instructions to a minimum. The 'easi-build' sketches and illustrations should provide you with all the necessary information to complete the model. You start construction of the fuselage by laying your balsa strips over the plan, separate them carefully and join with cross pieces to form a square section. Cement together and then add $\frac{1}{16}$th sheet side pieces, cabin, nose block and skid as shown after construction.

Cover and Dope

Next cover the fuselage with tissue, the technique of which was shown in last month's Meccano Magazine. Brush tissue with water and, when dry, give one coat of clear dope. Cut out fin and tailplane parts and also give one coat of clear dope, pinning them to board while drying to avoid warping. Finally, cement the fin and tailplane in position on the rear of the fuselage.

The propeller block, which fits at the rear of the model, is made on $\frac{1}{4}$ in. balsa sheet. The $\frac{1}{32}$ in. ply discs give added strength. After constructing the propeller block, drill it accurately and screw in an 18 standard wire gauge (s.w.g.) brass bush. Before fitting the K.K. plastic propeller, you will need to cut or file off the spinner portion to provide a flat surface. Assemble propeller and cup washers on the drive shaft and insert the shaft through the bush. Finally, form a hook on the shaft, checking that it does not touch the inside of the fuselage when turning. The propeller block should be a tight fit in the end of the fuselage and can be given two coats of dope.

Make a tracing of the wing panel from the plane and reverse it for building the right-hand wing section. Build the wing in two halves and then join them by cementing together the centre ribs. Add the leading and trailing edge (L.E. and T.E.) centre pieces. Pin the centre section to the building board and check, before the cement dries, that you have 2 in. clearance under each wing tip. This dihedral is important.

Cover wing panels with four pieces of tissue. Water shrink as described and then give one coat of dope. An important point when shrinking and doping is to do ONE panel at a time and during drying, pin panel to the building board, raising it on small balsa blocks as shown on plan to prevent the under-surface sticking to the board. Pinning down ensures a warp-free wing. Cover centre section with $\frac{1}{32}$nd sheet balsa and cement incidence block in place. Assemble wing to fuselage in position shown on plan with a not-too-tight rubber band.

Take 36 in. of $\frac{3}{16}$ in. strip rubber and tie to form an 18 in. loop. Apply some rubber lubricant (4d. a tube) and with the aid of a weighted length of thread, pull the rubber motor through the fuselage. Anchor at the front with a dowel rod and fit the other end over the drive-shaft hook. Wind the propeller a few turns to take up the motor slack and push the propeller block into place at the end of the fuselage.

Now comes the very important business of balancing your model. *Do not attempt any flying before doing this.* Add lead or a piece of old, rolled-up cement tube to the recess in the nose block, until the model hangs level when suspended from the point marked C.G. (centre of gravity or balance point) on the plan. Your model should then be perfectly balanced.

Flying your model

Choose a calm day and a field with long grass for your first flight. Hold the model by the propeller and rear end in one hand. You'll soon get the knack of this! Then, gently push the model forward and let go. If a breeze is blowing, launch the model into the wind. If the model dives, move the wing slightly forward. If it stalls (nose goes up and it slides back on its tail before diving to the ground) move the wing slightly back. The perfect launch,

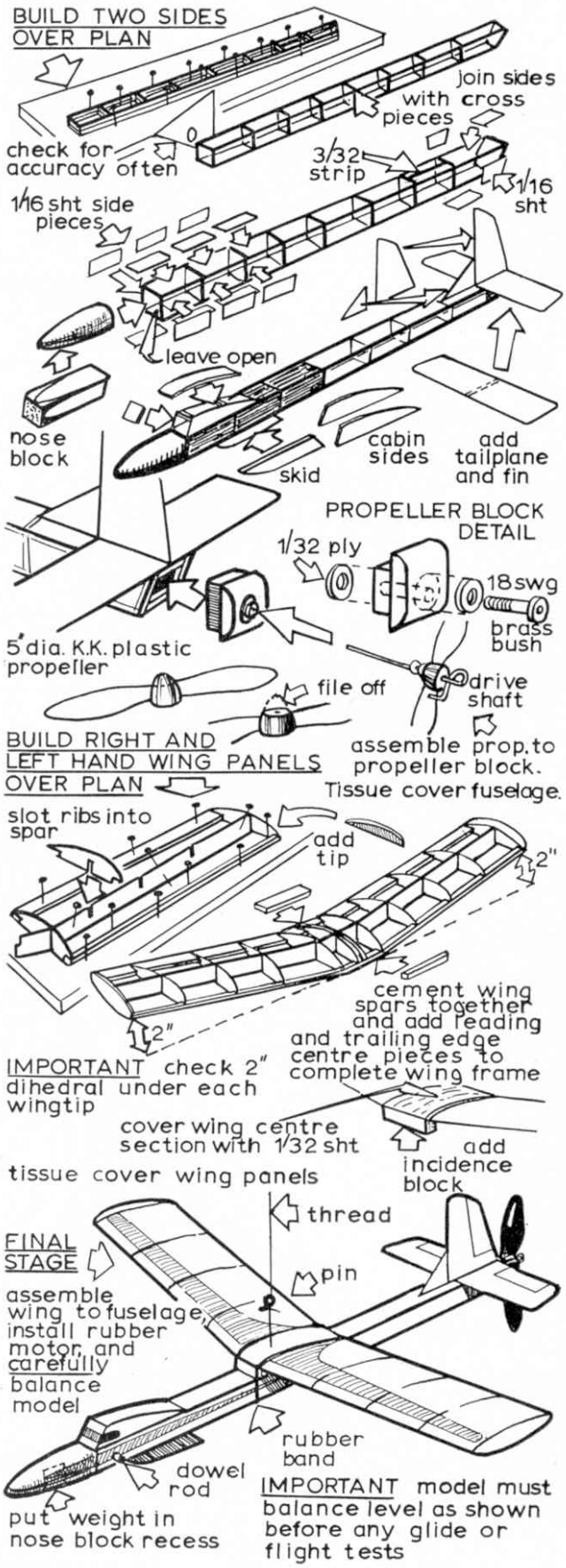

from a height of five to six feet, should provide a straight glide with the model landing about 10 yards away.

Before trying a 'powered' flight, it will be necessary to cement a $\frac{1}{16}$th square strip of balsa to the *left-hand* side of the propeller block (viewed from rear) for 'trimming' your model. Once you have done this, you may wind on about 150 to 200 turns on the propeller (anti-clockwise) and launch your model as already described. Avoid throwing the model and as each successful flight is completed you may increase the number of turns on the motor to a maximum of 650. Although the Marquita is only small it flies quite a long way, so make sure that the field you fly in is large or you might easily lose your new model.

6 strips $\frac{3}{32}$ in. by $\frac{3}{32}$ in. by 36 in. medium grade balsawood.
1 sheet $\frac{1}{16}$ in. by 3 in. by 36 in. medium grade balsawood.
1 small block $1\frac{1}{2}$ in. by 1 in. by 1 in. medium grade balsawood.
Scrap pieces of $\frac{1}{32}$ in., $\frac{1}{8}$ in. and $\frac{1}{2}$ in. sheet balsawood.
Small piece of $\frac{1}{32}$ in. plywood.
1 sheet lightweight tissue (white)
1 sheet lightweight tissue (coloured) if trim is desired.
1 18 S.W.G. brass bush.
1 6 in. length cup washers.
36 in. length $\frac{3}{16}$ in. strip rubber.
1 4 in. approx. rubber band.
1 in. length of $\frac{1}{8}$ in. diameter dowel rod.
1 5 in. diameter K.K. plastic propeller.
1 medium size tube balsa cement.
1 small tube tissue adhesive.
1 small tube rubber lubricant.
1 small bottle clear dope.
Modelling pins, tracing paper, razor blades (single-edge), build-board, drill, small pair of pliers, medium file, 45° set square, pencil and a soft brush.

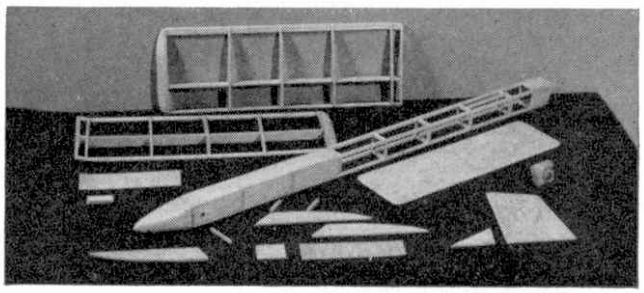

The balsa sections ready for final assembly.

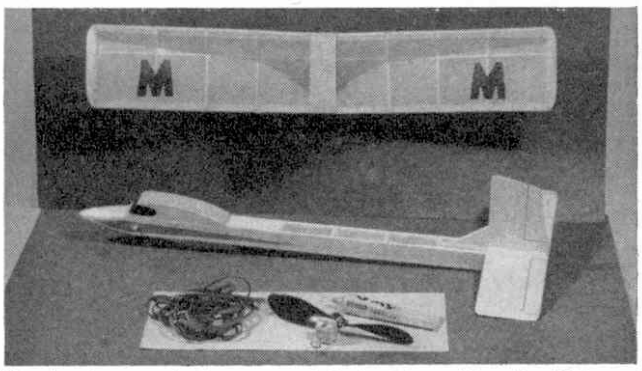

The fuselage and wings completed and awaiting the fitting of the rubber motor.

The Marquita beautifully constructed and ready to fly.

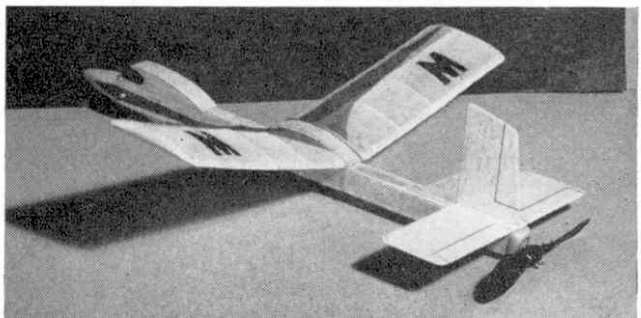

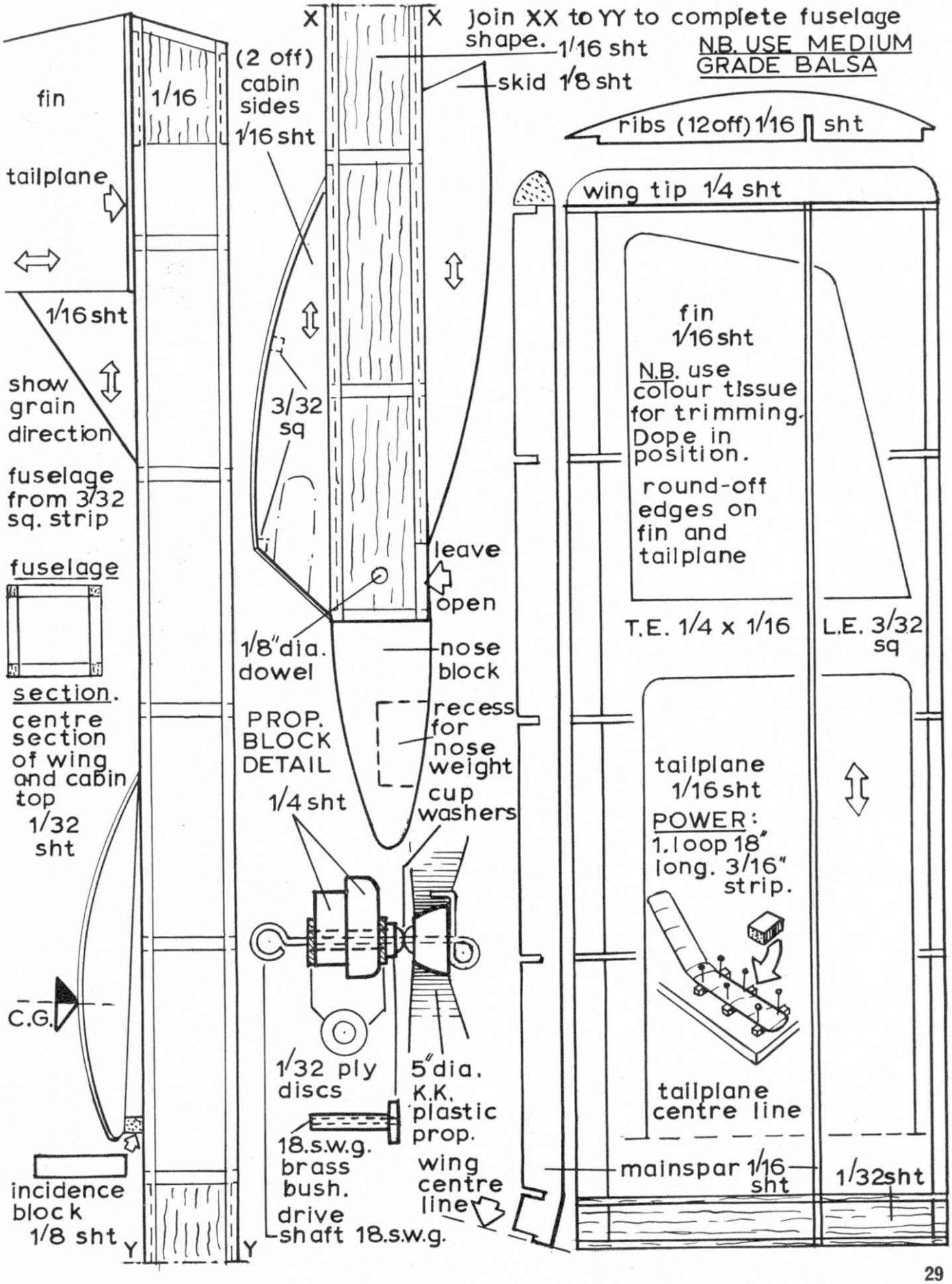
X
X
join XX to YY to complete fuselage shape.
1/16 sht
N.B. USE MEDIUM GRADE BALSA
skid 1/8 sht
fin
1/16
(2 off) cabin sides 1/16 sht
ribs (12off) 1/16 sht
tailplane
wing tip 1/4 sht
1/16 sht
show grain direction
3/32 sq
fin 1/16 sht
N.B. use colour tissue for trimming. Dope in position.
round-off edges on fin and tailplane
fuselage from 3/32 sq. strip
fuselage
leave open
1/8" dia. dowel
nose block
T.E. 1/4 x 1/16
L.E. 3/32 sq
section.
centre section of wing and cabin top 1/32 sht
PROP. BLOCK DETAIL
recess for nose weight
1/4 sht
cup washers
tailplane 1/16 sht
POWER: 1. loop 18" long. 3/16" strip.
C.G.
1/32 ply discs
5" dia. K.K. plastic prop.
18.s.w.g. brass bush.
tailplane centre line
mainspar 1/16 sht
1/32 sht
incidence block 1/8 sht
wing centre line
drive shaft 18.s.w.g.
Y
Y