produces an excellent effect, and will enable the magician to add further to his reputation!

Constant Mesh Gear-Box for Cranes

The simple gear-box shown in Fig. 2 provides three separate movements, and is designed specially for model cranes or excavators. Two of the movements are arranged for winding or paying out Cord, and can be used for controlling the load and luffing the jib. Both winding barrels are fitted with independent brakes, and the drive to either of the two winding drums is brought into operation by moving a single control lever. The third movement is arranged so that a drive can be transmitted to slewing or travelling motions.

The outstanding feature of the gear-box is that all three movements are brought into operation by friction clutches. This avoids any possible damage to gears by forcing them into mesh with the teeth out of line, and also enables the drive to be taken up very smoothly without the jerk characteristic of gear engagement.

The gear-box housing is assembled by joining two $3\frac{1}{2}'' \times 2\frac{1}{2}''$ Flanged Plates together by $4\frac{1}{2}'' \times 2\frac{1}{2}''$ Flat Plates. The drive from the Motor is transmitted by Chain and Sprockets to the input shaft 1, which is fitted with a $\frac{1}{2}''$ diameter, $\frac{1}{2}''$ face Pinion 2. The 57-tooth Gears 3 and 4, mounted on Rods 5 and 6 respectively, are in constant mesh with Pinion 2. Gear 3 is fixed on Rod 5, and a 1″ Pulley 7 is locked in position on either side of the Gear. The Pulleys are fitted with Rubber Rings that form the friction surfaces between the winding drums. Each drum is made from a Bush Wheel and a $1\frac{1}{2}''$ Pulley connected by four $\frac{3}{4}''$ Bolts, and they are loosely mounted on Rod 5. The drive is engaged by sliding Rod 5 so that one of the 1″ Pulleys is pressed against its winding drum. The sliding movement of the Rod is controlled by a Crank 8 fitted with a Threaded Pin that engages between Collars on the end of the Rod. Crank 8 is fixed on a Rod mounted in a $4\frac{1}{2}'' \times \frac{1}{2}''$ Double Angle Strip bolted to the housing, and it is controlled by a lever.

The brake on each drum consists of a length of Cord tied at one end to the housing and passed round the $1\frac{1}{2}''$ Pulley. It is then attached to a Crank 9 that can be connected to a spring-loaded foot pedal or lever.

The third movement is obtained by pressing Gear 4, free to turn on Rod 6, against a 1″ Pulley 10 fitted with a Rubber Ring. The 1″ Pulley is fixed on the Rod. The movement of Gear 4 is controlled by a Crank 11 on Rod 12 fitted with a Threaded Pin that engages the boss of the Gear.

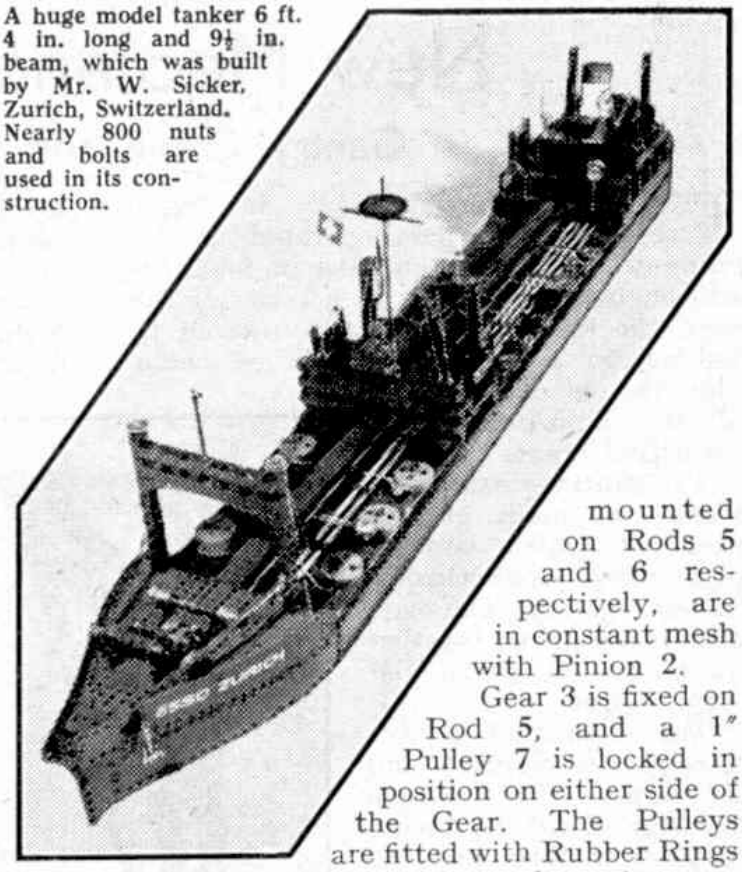

A huge model tanker 6 ft. 4 in. long and $9\frac{1}{2}$ in. beam, which was built by Mr. W. Sicker, Zurich, Switzerland. Nearly 800 nuts and bolts are used in its construction.

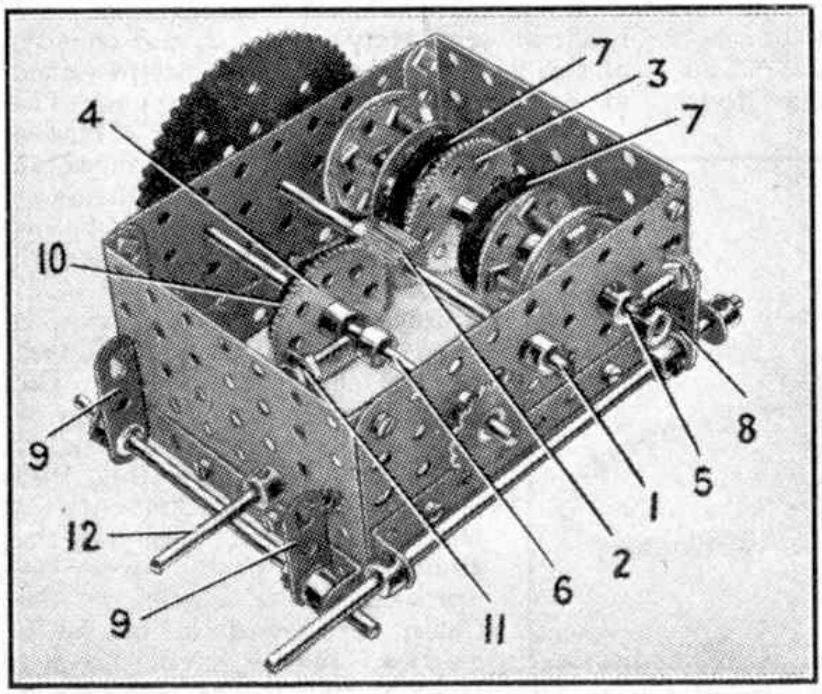

Fig. 2.—A useful constant mesh gear-box for model cranes.

New Meccano Models

Gantry Crane and Ball Game

THE sturdy model shown in Fig. 1 represents a hand-operated gantry crane of the kind often used in foundries and engineering shops. In a crane of this type the load is hoisted and lowered by pulling on an endless length of chain, and the model includes all the main features of an actual crane.

The gantry is assembled from two main girders, each of which consists of two 18½″ Angle Girders bolted together. The main girders are joined together at each end by a 3½″ Angle Girder.

The assembled gantry is supported at each end by four 12½″ Angle Girders. These are bolted in pairs to form inverted triangles, the bases of which are bolted to the gantry as shown in Fig. 1. The lower ends of the Girders are bolted to a 9½″ Angle Girder 1, which is extended upward by a 9½″ Flat Girder 2. A further 9½″ Angle Girder 3 is attached to Girder 1 by Double Brackets, and the travelling wheels are fixed on 1½″ Rods mounted in Girders 1 and 3. The wheels are 1½″ Pulleys, and the Rods are held in position by Collars. The legs supporting the gantry are braced by 5½″ and 3½″ Strips as shown.

The hoisting mechanism is carried in a small trolley that is arranged to travel to and fro along the gantry. This trolley is shown separately in Fig. 2, and consists of two 2½″ × ½″ Double Angle Strips joined at each end by a Flat Trunnion. The trolley runs on four ¾″ Flanged Wheels fixed to 3″ Rods mounted in the Double Angle Strips.

The hoisting movement is controlled by an endless length of Chain passed round a 2″ Sprocket 4. This Sprocket is fixed on a 3½″ Rod 6 mounted in the Flat Trunnions The Rod carries also a Worm 5 that meshes with a ½″ Pinion on a 2½″ Rod. On this Rod is also a 1″ Sprocket, and a length of Chain tied to the trolley at 7 passes over the Sprocket. The slack of the Chain is allowed to fall in a loop 8, and a small Loaded Hook is tied to the free end of the Chain.

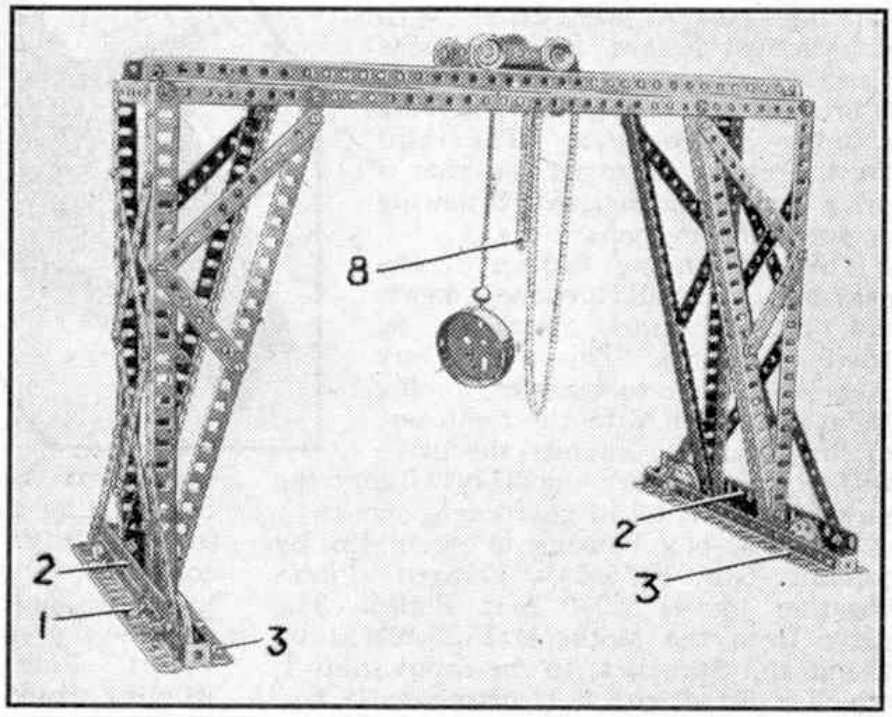

Fig. 1. A manually operated travelling gantry and traversing hoist that forms an interesting subject for a simple model.

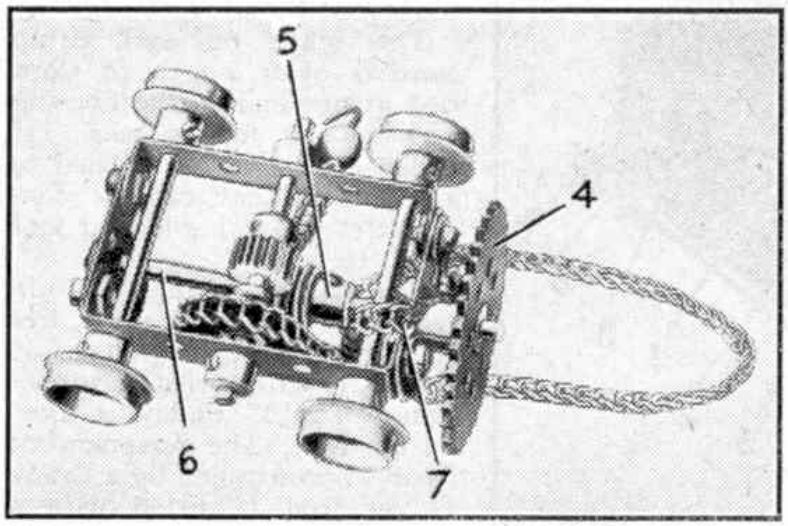

Fig. 2. The traversing hoisting trolley showing the arrangement of the gearing and chain.

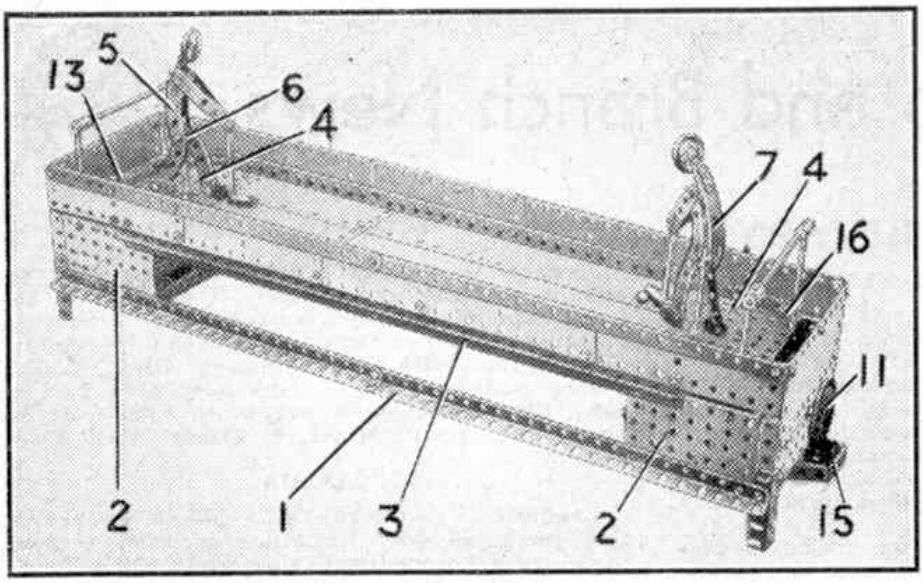

Fig. 3. Much good fun can be had from this easy-to-build mechanical ball game.

Parts required to build model Travelling Gantry Crane: 12 of No. 2; 4 of No. 2a; 4 of No. 3; 4 of No. 7a; 8 of No. 8; 4 of No. 8a; 4 of No. 11; 4 of No. 18a; 4 of No. 20b; 4 of No. 21; 1 of No. 26; 1 of No. 32; 59 of No. 37; 13 of No. 38; 2 of No. 48a; 2 of No. 48b; 1 of No. 57c; 11 of No. 59; 1 of No. 94; 1 of No. 95; 1 of No. 96; 2 of No. 103a; 2 of No. 126a; 1 of No. 162a.

Our next model, shown in Figs. 3 and 4, is a mechanical ball game based on the game of hockey. It is designed for two players, and consists of two pivoted figures mounted in front of goalposts and each provided with a hockey stick. The figures are so arranged that by turning a handwheel at each end of the model, they can be actuated and made to strike a Metal Ball. Each player tries to strike the Ball so as to direct it past the opposing player's goalkeeper and so score a goal.

Construction is begun by bolting a $5\frac{1}{2}'' \times 2\frac{1}{2}''$ Flanged Plate and two $2\frac{1}{2}''$ Angle Girders to the ends of the compound girders 1, which consist of two $12\frac{1}{2}''$ Angle Girders overlapped two holes. Two $3\frac{1}{2}'' \times 2\frac{1}{2}''$ Flanged Plates 2 are bolted to the sides, and these are connected by $18\frac{1}{2}''$ Angle Girders 3. The $5\frac{1}{2}'' \times 3\frac{1}{2}''$ Flat Plates 4 at each end of the model are attached to the sides by 3" Angle Girders, and are arranged so as to leave a space in front of the $5\frac{1}{2}'' \times 2\frac{1}{2}''$ Flanged Plate. The remainder of the floor of the table consists of three $12\frac{1}{2}''$ Strip Plates and three $5\frac{1}{2}'' \times 2\frac{1}{2}''$ Flexible Plates. The sides of the table are $5\frac{1}{2}'' \times 1\frac{1}{2}''$ Flexible Plates and are attached to an $18\frac{1}{2}''$ Angle Girder which is bolted to Girder 3. The ends are enclosed by $5\frac{1}{2}'' \times 2\frac{1}{2}''$ Flexible Plates fixed to the side plates by Angle Brackets and bolted to the $5\frac{1}{2}'' \times 2\frac{1}{2}''$ Flanged Plates.

The figures of the two goalkeepers are identical in construction and are built up as follows. Two $2\frac{1}{2}''$ Curved Strips 5 forming the body and two $2\frac{1}{2}''$ Strips representing the arms are bolted to a Double Bracket. At their other ends the $2\frac{1}{2}''$ Curved Strips, together with two similar parts forming the legs, are attached to a Collar 6 by a bolt that carries two Washers on its shank. A Rod and Strip Connector is bolted between the Strips forming the arms and in this is fixed a $2\frac{1}{2}''$ Rod fitted with a Coupling which represents the hockey stick. The head is a 1" loose Pulley, and is attached by an Obtuse Angle Bracket, to a Formed Slotted Strip 7, which is bolted to the Double Bracket forming the shoulders. A 4" Rod is held in Collar 6, and passed through Plate 4 and through a Double Bent Strip 8 bolted beneath the Plate 4. The Rod carries at its lower end a $\frac{1}{2}''$ Pinion that engages a $1\frac{1}{2}''$ Contrate Wheel 9. The Contrate is fixed on a 5" Rod, bearings for which are provided by a $5\frac{1}{2}''$ Strip 10 and (*Continued on page 572*)

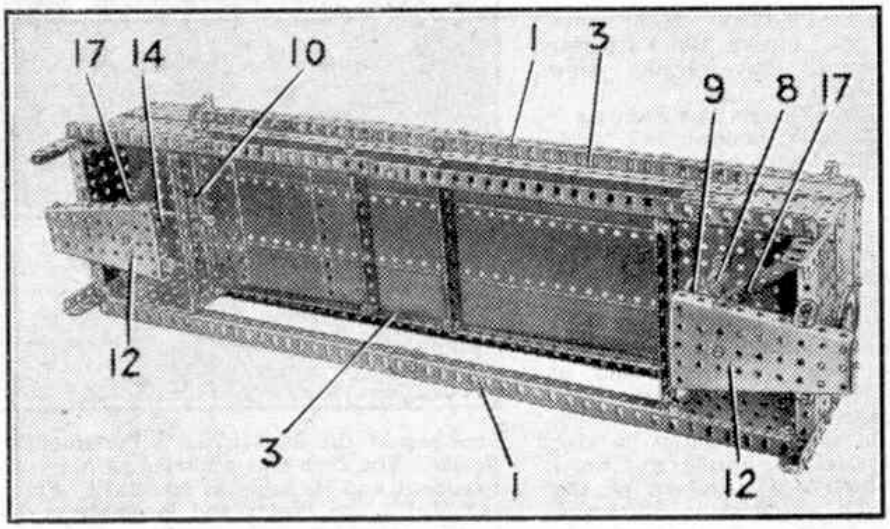

Fig. 4. An underneath view of the ball game.