MECHANISMS FOR THE MECCANO MODEL-BUILDER

4-Speed And Reverse Gear-Box: A Novel Reversing Device

ONE of the fascinating features of Meccano is the facility it provides for translating ideas into practical form and in no direction is this more evident than in the designing and construction of mechanisms for carrying out particular mechanical functions.

By Spanner

Mechanism of one kind or another is required in all working models and unforunately some model-builders are not very good at designing mechanisms for themselves, and they rely on copying the mechanisms of similar models shown in the Meccano Model Books and other publications.

I am sure, therefore, that the two useful mechanisms described on this and the opposite page will be eagerly welcomed by such model-builders. Before I describe these mechanisms I want to make clear exactly what is meant by "mechanism." A mechanism can best be defined perhaps as an assembly of metal parts (or other suitable material) fitted together in such a manner that when set in motion by a Motor or other means, the complete assembly carries out a particular functional purpose. One of the best examples I can give is the gear-box of a motor car. Essentially this is a collection of gear-wheels of various sizes. levers and shafts, arranged in such a manner that when in motion it is capable of transmitting different speeds of drive to the road wheels of the car and so enabling the power of the engine to be applied to the best advantage. Now, if we assemble several complete and suitable mechanisms together so that the separate functions of each are co-ordinated and applied to a specific end, we have got a complete machine. The modern car chassis is a first class example of the way in which a large number of different mechanisms are linked together to produce a complete machine. Among these mechanisms are clutch, gear-box differential, brakes, and steering gear.

The two mechanisms I am describing here are a 4-speed and reverse gear-box, and a novel form of drive reversing mechanism, both of which can be adapted and applied to many different kinds of models.

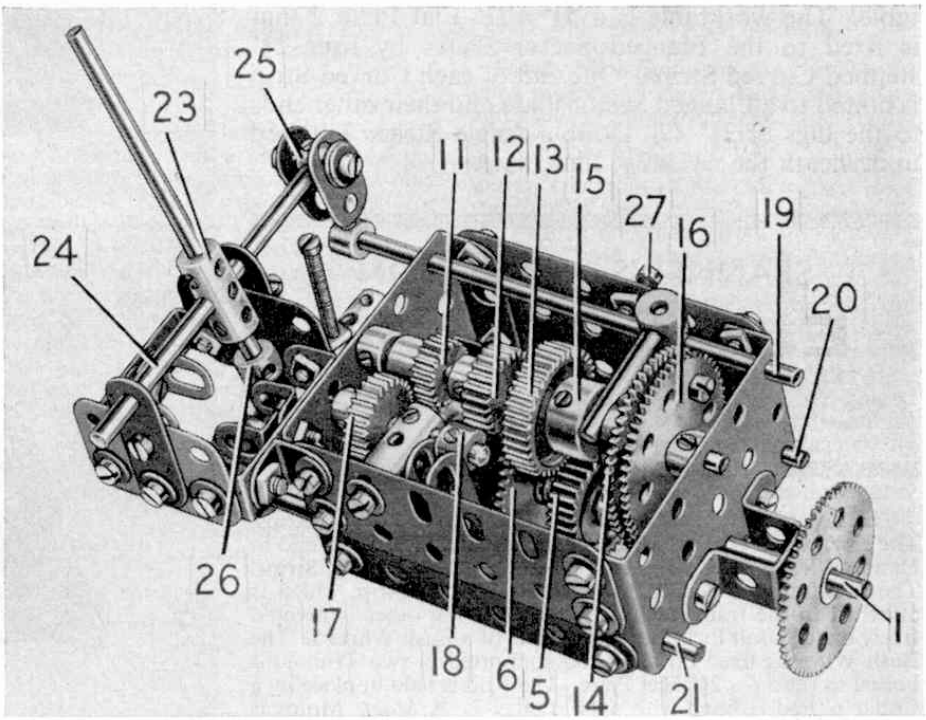

Fig. 1. A four-speed and reverse gear-box which can be adapted for incorporation in many different models.

The gear-box is shown in Figs. 1 and 2 and is fitted with a simple but effective gate change. An unusual feature in a Meccano mechanism of this kind is that the gears are arranged to slide on the shafts. Each side of the gear-box housing consists of a 3″ Flat Girder and a 3″ Strip, and the ends are $2\frac{1}{2}'' \times 1\frac{1}{2}''$ Flanged Plates.

The input shaft 1 is mounted in one of the Flanged Plates and in a Double Bent Strip bolted to it. The inner end of the shaft carries a $\frac{1}{2}''$ Pinion 2, but the Rod occupies only half the bore of this Pinion. The other half is used to locate the inner end of the output shaft 3. The output shaft is fitted with a $\frac{1}{2}''$ Pinion 4 and a 1″ Gear 5, both of which are fixed in position, and a 50-tooth Gear 6 and a 57-tooth Gear 7 held in a Socket Coupling 8. The Socket Coupling and its Gears are free to slide on the shaft, but are made to turn with it by a $\frac{3}{8}''$ Bolt fixed by a nut in a Bush Wheel 9. This Bolt engages a hole in the Gear 7.

The layshaft carries a $\frac{1}{2}''$ Pinion 11 and a $\frac{3}{4}''$ Pinion 12, fixed in position, a 1″ Gear 13 and a 57-tooth Gear 14, held in a Socket Coupling 15 that is free to slide, and a 57-tooth Gear 16 fixed on the shaft. A $\frac{3}{8}''$ Bolt held in Gear 16 by a nut engages a hole in Gear 14, so that the Socket Coupling assembly turns with the shaft.

The $\frac{3}{4}''$ reverse Pinion 17 is fixed on a $1\frac{1}{2}''$ Rod that slides in a Threaded Coupling. The latter is fixed tightly on a bolt passed through a slotted hole of one of the Flat Girders, and is adjusted so that Pinion 17 can be meshed with both the Pinion 11 and the Gear 7. The $1\frac{1}{2}''$ Rod carries a Collar 18.

The gear ratios are obtained as follows. Top gear is provided when the Socket Coupling 15 is moved to the left (Fig. 1), so that the Gear 14 engages the Pinion 4. When the Socket Coupling 15 is moved to the right (Fig. 1) Gear 13 engages the Gear 5, to provide third gear with a ratio of 3:1. The first and second gear ratios are obtained by sliding Socket Coupling 8. When this is moved to the left (Fig. 2) the Gear 7 engages the Pinion 11 and provides first gear with a ratio of 9:1. By sliding Socket Coupling 8 to the right (Fig. 2),

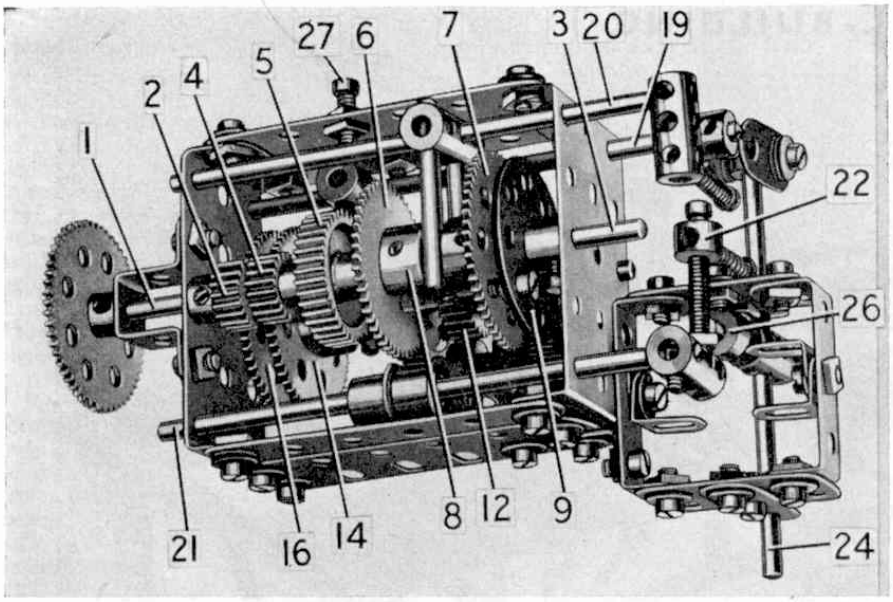

Fig. 2. The four-speed and reverse gear-box seen from underneath.

the Gear 6 is meshed with Pinion 12 to engage second gear with a ratio of 6:1.

Reverse gear is engaged by sliding Pinion 17 to the right (Fig. 1) when the other gears are neutral. The Pinion then engages both the Pinion 11 and the Gear 7 and provides a reverse drive with a ratio of 9:1.

The sliding movement of the Socket Coupling is controlled by selector Rods 19 and 20, each of which carries a Coupling fitted with two 1½″ Rods that engage the groove in one of the Socket Couplings. Rod 19 carries a Collar fitted with a 7/32″ Bolt, and on Rod 20 a Coupling is fixed. A 1½″ Bolt is screwed into this Coupling as shown and is held in place by a nut. The movement of Rods 19 and 20 is restrained by ⅜″ Bolts 27. These are fixed in the housing by two nuts each and bear lightly against the Rods.

The reverse selector Rod 21 carries two Cranks, arranged one on either side of the Collar 18. A Coupling fixed vertically on this Rod has a 1⅛″ Bolt held in by a nut, and a Collar 22 is fixed on the Bolt. A ¾″ Bolt is held in this Collar by a nut.

The gear lever gate assembly is made by bolting two 1½″ Flat Girders to the lugs of two 1½×½″ Double Angle Strips. One of the latter is bolted to the end of the gear-box housing and is connected to the housing by an Angle Bracket (Fig. 1). A made-up double bracket, consisting of two Angle Brackets, is bolted to each Double Angle Strip.

The gear lever is a Rod held in a Coupling 23 fixed on a Rod 24. Rod 24 is free to slide endways in 1½″ Strips bolted to the 1½″ Flat Girders, and it carries a "spider" 25 from a Swivel Bearing. Two Fishplates are fixed on bolts screwed into the spider, and are bent together slightly so that they fit closely over the heads of the Bolts on the selector shafts. A 1″ Rod fixed in the lower section of Coupling 23 carries a Collar 26. This Collar engages between the forks of the gate as the lever is moved.

The Bolts on the end of the selector shafts should be arranged so that when all the gears are in neutral the Bolts are exactly in line. The Fishplates attached to the spider 25 will then slide freely over the Bolts when the gear lever is moved sideways. To engage a gear the lever is slid sideways until the Fishplates engage the Bolt on the appropriate selector shaft. The gear lever is then moved forward or backward to bring the gear trains into mesh.

The reversing mechanism shown in Fig. 3 is especially interesting due to the fact that a combination of gears and pulleys is used to obtain forward and reverse movements, and it was designed to eliminate the need for contrate or bevel gears.

The housing for the mechanism consists of a 2½″×2½″ Flat Plate bolted to each flange of a 2½″×1½″ Flanged Plate, but this can of course be altered to suit a particular model. The drive from the power unit is taken to a 3½″ Rod 1, which is mounted in the 2½″×2½″ Flat Plates and is fitted with a ½″ Pulley. This Pulley is connected by a 2½″ Driving Band to a similar Pulley fixed on a 2″ Rod 2. The Rod 2 is mounted in a 3½″ and a 2½″ Strip connected together by two 1½″×1½″ Double Angle Strips. The lower ends of these Strips are passed over the Rod 1, and the upper end of the 3½″ Strip forms the reversing lever. The Rod 2 is fitted also with a ½″ Pinion 3.

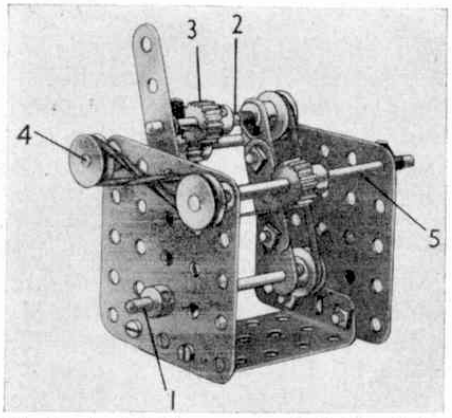

Fig. 3. A novel drive reversing device in which a combination of gears and pulleys is used to obtain forward and reverse movements.

An intermediate Rod 4 is mounted in the 2½″×2½″ Flat Plates, and carries a ½″ Pinion and a ½″ Pulley. The ½″ Pulley is connected by a crossed Driving Band to a similar Pulley on the output shaft 5, which is fitted also with a ½″ Pinion. The Pinion on Rods 4 and 5 are arranged so that they can be meshed with the Pinion 3 on Rod 2 by moving the reversing lever.

Reverse drive is obtained through the crossed Driving Band between the Pulleys on Rods 4 and 5.

A REMINDER

WINTER MODEL-BUILDING CONTEST No. 1

Here is a reminder, all Meccano model-builders, that the closing date for entries in our Winter Model-Building Competition No. 1 is March 30. Any intending competitors who have not yet sent in their entries must hurry and finish them, so that they can submit them in time. Entries received after March 30 will be disqualified.

The rules of the competition are quite simple and straightforward. Contestants are first required to build a model, which must be original in design and not a copy of a model shown in our instructions books or other publications. Provided they are original, models may be of any kind whatever, and competitors may use any size of Outfit or any quantity of parts in building them. When the model has been completed the next step is to obtain a good clear photograph of it or, failing this, a neat sketch will suffice. The photographs or drawings need not be the competitors own work, but the model itself must be the result of his own unaided efforts. The actual model itself must not be sent in under any circumstances.

The competition is open to model-builders of all ages living anywhere in the world. Entries will be divided into two sections A and B. Section A is for competitors under 14 years of age on March 30 and Section B is for those aged 14 or older on that date.

A separate set of prizes will be awarded in each Section as follows: Section A: 1st. Cheque for £5.5.0; 2nd. Cheque for £3.3.0; 3rd. Cheque for £2.2.0. Ten prizes each of 10/6d. Section B: 1st. Cheque for £7.7.0; 2nd. Cheque for £5.5.0; 3rd. Cheque for £3.3.0; (*Cont. on page 129*)