Time for Christmas

An Easy-to-build Meccano Clock

WE receive many requests for information on clock construction, and although we have included several clocks of various types in past issues of the *Meccano Magazine*, these requests still come along. We are therefore including once again illustrations of a very popular and successful clock mechanism that was described in the *Meccano Magazine* some years ago. This mechanism is weight-driven, and it can be incorporated in a "grandfather" type of casing or if desired in the smaller type of case usually known as the "grand-daughter" type. The Clock will run for about 6–8 hours on one winding. When the mechanism is completed the builder will find it an interesting but quite an easy task to design and construct a suitable casing for it, and this can be as large and elaborate as the parts available to the builder permit.

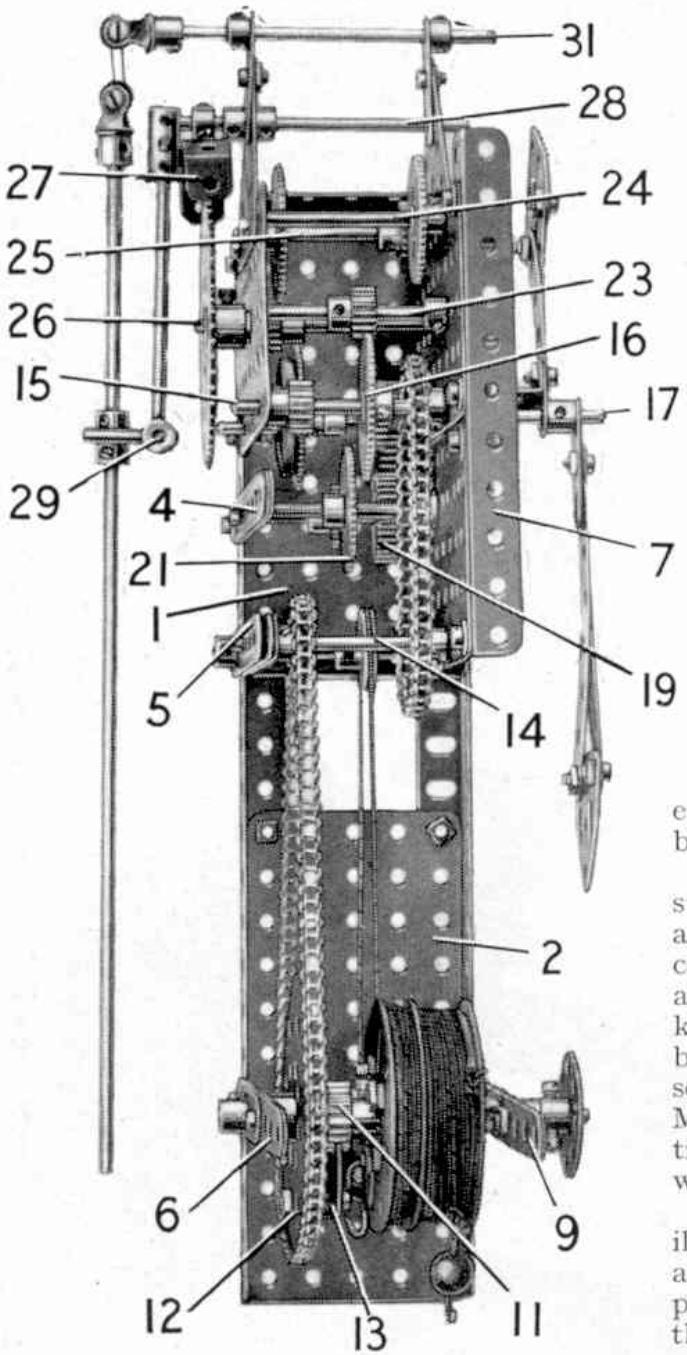

Fig. 1. The Clock Mechanism. Details of the gear trains are seen in this side view of the mechanism.

Fig. 2. The Clock pendulum and weight "bob".

A clock is one of the most satisfying subjects for Meccano model-builders and a real challenge to even an experienced constructor, for careful and accurate assembly is essential if reliable time-keeping is to be obtained. Nothing could be more fascinating and satisfying, than setting a clock, constructed entirely from Meccano parts, to work, and seeing how it ticks off the seconds and marks up the hours with "clockwork regularity".

As a model of this kind requires large illustrations to show its construction clearly and as the space available here does not permit us to include such illustrations and the rather lengthy constructional details of the model, we are publishing the constructional details separately, together with a list of the parts required to build

the model. Any reader who wishes to build this Clock can obtain the instructions free of charge by writing to the Editor, *Meccano Magazine*, Binns Road, Liverpool 13, enclosing a 3d. stamp to cover postage. Readers living in Canada, Australia, New Zealand, South Africa, Ceylon, Italy, Rhodesia and the United States of America, should write to our main agents in those countries, enclosing suitable stamps for postage.

Applications for the instructions should be made at once, however, as supplies are limited.

The Clock Mechanism is illustrated complete in Fig. 1, and while it is quite easy to build up, it will keep good time once it is properly adjusted. The pallet and escapement wheel of the Clock consist in this case of a $2\frac{1}{2}'' \times \frac{1}{2}''$ Double Angle Strip and a 3″ Sprocket Wheel. The Double Angle Strip has to be carefully bent to the shape shown in Fig. 3 so that when it is horizontal and the pendulum is vertical, the lugs of the Double Angle Strip just clear the teeth of the Sprocket. When the pendulum is in motion the escapement wheel is allowed to move through the space of one tooth for each swing.

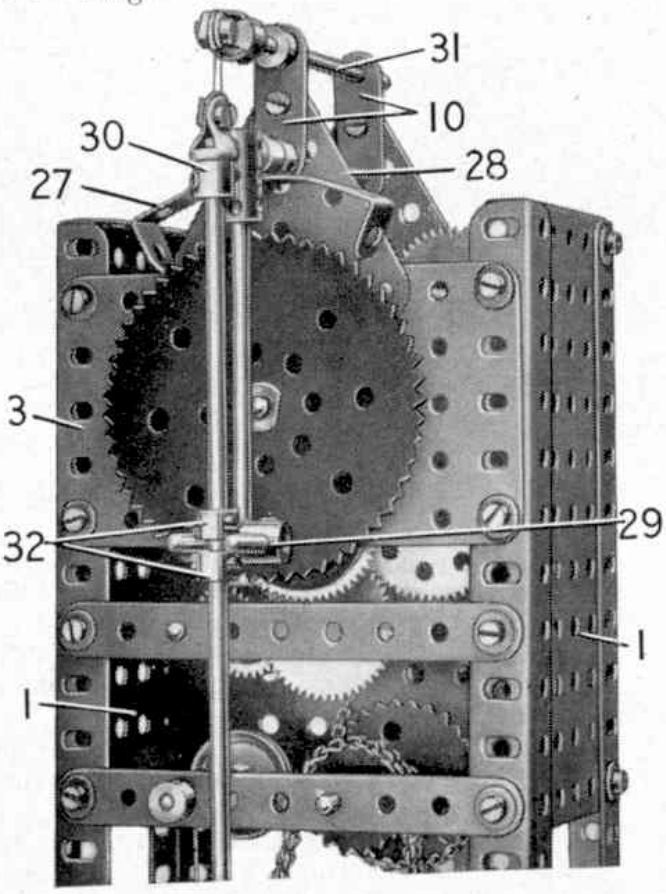

Fig. 3. The back of the Clock showing details of the escapement device.

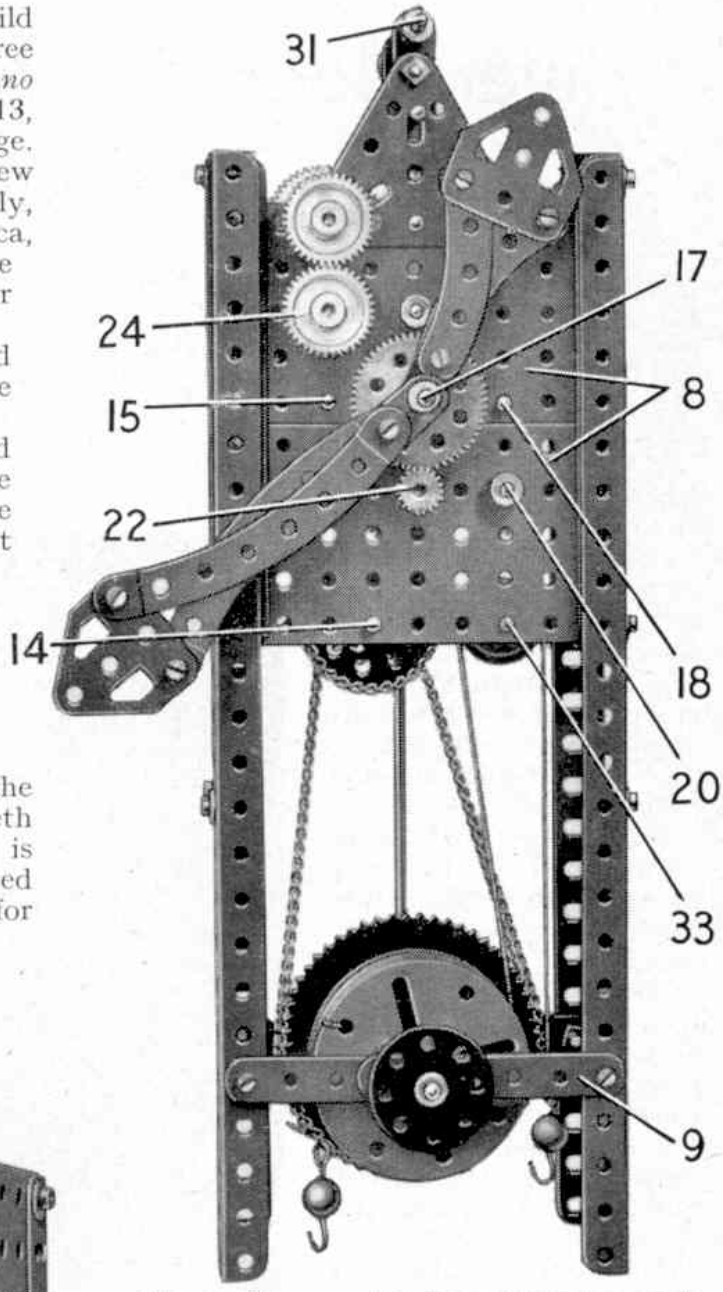

Fig. 4. The complete Clock Mechanism ready for mounting in a suitable casing.

The Clock is regulated by adjusting the position of the pendulum bob (see Fig. 2). If the Clock gains in time the position of the bob should be lowered, while if it loses time it will be necessary to move the bob to a higher position on the Screwed Rod.

Now don't forget, write for your copy of the instructions for this model, and a list of the parts required, without delay.

It is a real thrill to complete a model of this kind and set it working and we are sure that everyone who builds this Clock will feel a sense of achievement as he watches the pendulum swing to and fro and listens to the steady "tick, tick" of the escapement.

Meccano Weight-Driven Clock Mechanism.

Illustrated in the December, 1959, Meccano Magazine.

The housing for the mechanism is made by bolting two $12\frac{1}{2}$"Angle Girders at each side to a $5\frac{1}{2}$" x $2\frac{1}{2}$" Flanged Plate 1 and to a $5\frac{1}{2}$" x $2\frac{1}{2}$" Flat Plate 2. The sides are connected at the rear by a $4\frac{1}{2}$" x $2\frac{1}{2}$" Flat Plate 3, and by three $4\frac{1}{2}$" Strips at each of the points indicated at 4, 5 and 6 (Fig. 1). A $5\frac{1}{2}$" Angle Girder 7 is held inside each Flanged Plate by the same bolts that fix the $12\frac{1}{2}$" Angle Girder in position, and Girders 7 are connected by two $4\frac{1}{2}$" x $2\frac{1}{2}$" Flat Plates 8. Two $4\frac{1}{2}$" Strips 9, placed face to face are bolted in place as shown in Fig. 1. A $2\frac{1}{2}$" Triangular Plate is fixed to the Flat Plate 3 and the upper Flat Plate 8, and the Triangular Plates are extended upward by $1\frac{1}{2}$" Strips 10.

A double winding barrel for the Cords supporting the weights is assembled from three Wheel Flanges and three Face Plates. Two of the Wheel Flanges are placed between two Face Plates to make the drum for one of the Cords, and the second drum consists of a single Face Plate and Wheel Flange. The parts forming the drums are clamped tightly together by four $1\frac{1}{8}$" Bolts, and the drums are fixed by the set screws in the Face Plates to a 4" Rod. A Ratchet Wheel 11 is fixed on the Rod, and a 3" Sprocket 12 is free to rotate between the Ratchet and the Strips 6. The Sprocket is fitted with a Pawl 13, freely mounted on a $\frac{3}{4}$" Bolt fixed by two nuts in the Sprocket. The Pawl is held against the teeth of the Ratchet by a $2\frac{1}{2}$" Driving Band, which is passed through the hole in the Pawl and is looped over a $\frac{1}{2}$" Bolt fixed by two nuts in the Sprocket. The bearings for the 4" Rod are reinforced by Double Arm Cranks bolted to Strips 6 and 9.

The Sprocket 12 is connected by Chain to a 1" Sprocket on a $2\frac{1}{2}$" Rod 14, and a $1\frac{1}{2}$" Sprocket on Rod 14 drives a 1" Sprocket on a $2\frac{1}{2}$" Rod 15. Rod 15 is fitted with a 57-tooth Gear 16, and a $\frac{1}{2}$" Pinion that drives a 57-tooth Gear on a 4" Rod 17. The Gear is loose on Rod 17, but it is pressed by a Collar against a 1" Pulley fitted with a Rubber Ring. This arrangement forms a friction drive that enables the clock hands to be adjusted.

A $\frac{3}{4}$" Pinion is fixed on Rod 17 behind the 1" Sprocket seen on Rod 15 in Fig. 1. This Pinion is in mesh with a 50-tooth Gear on a $2\frac{1}{2}$" Rod 18 (Fig. 3) that

carries also a 1" Gear, and the 1" Gear engages a similar Gear 19 on a $2\frac{1}{2}$" Rod 20. Rod 20 is fitted with a $\frac{3}{4}$" Pinion that drives a 50-tooth Gear 21 on a $2\frac{1}{2}$" Rod. A $\frac{1}{2}$" Pinion 22 (Fig. 3) is fixed on the $2\frac{1}{2}$" Rod outside the Flat Plates 8, and this engages a 57-tooth Gear that is loose on Rod 17. The 57-tooth Gear is spaced from the Flat Plate 8 by a Collar, and the hour hand is bolted to a Double Bracket fixed to the Gear. The hour hand consists of two $2\frac{1}{2}$" Curved Strips bolted to the Double Bracket, and a Fishplate held by the same bolt is slipped over Rod 17. The minute hand is assembled as shown in Fig. 3, and it is bolted to a Crank fixed on the end of Rod 17.

The drive to the escapement wheel is taken from the 57-tooth Gear 16 to a $\frac{1}{2}$" Pinion on a $2\frac{1}{2}$" Rod 23. A 1" Gear is fixed on Rod 23 outside the Flat Plates 8, and it drives a similar Gear on a $2\frac{1}{2}$" Rod 24. Rod 24 is fitted with a 50-tooth Gear that engages a $\frac{3}{4}$" Pinion on a $2\frac{1}{2}$" Rod 25, and a 57-tooth Gear on Rod 25 drives a $\frac{1}{2}$" Pinion on the escapement shaft 26. This shaft is a 3" Rod, and the escapement wheel a 3" Sprocket, is fixed outside the Flat Plate 3. Collars are used to hold the gear train Rods in position.

The pallet is a $2\frac{1}{2}$" x $\frac{1}{2}$" Double Angle Strip 27 bent to the shape shown in Fig. 4. It is attached by a bolt to a Collar on a $3\frac{1}{2}$" Rod 28, mounted in the Triangular Plates and the lower holes of Strips 10. Three Washers are placed on the bolt before it is passed through the Double Angle Strip. Rod 28 is fitted at its outer end with a Coupling, and a 4" Rod held in this Coupling carries a Coupling 29. Two 1" Rods are fixed in Coupling 29 to form the crutch for the pendulum.

The pendulum consists of an $11\frac{1}{2}$" and an 8" Rod connected by a Coupling and extended by a 6" Screwed Rod held in a Threaded Coupling. The bob weight is made by bolting a Boiler End to a Face Plate by means of two $\frac{3}{4}$" Bolts. The Screwed Rod is passed through opposite holes in the Boiler End, and nuts are used to keep the weight in position.

An End Bearing 30 is fixed to the upper end of the pendulum and two short lengths of spring wire are clamped in it by a nut and bolt. The lengths of wire are fixed also in a second End Bearing that is held on a $3\frac{1}{2}$" Rod 31. The Rod is passed through the top holes on Strips 10 and retained in place by Collars. Two Collars 32 are fixed to the pendulum, one on either side of the 1" Rods in Coupling 29.

Lengths of Cord are tied to the drums of the winding barrel, and are wound round the drums anticlockwise. One length is passed over a 1" Pulley on a $2\frac{1}{2}$" Rod 33, and the free ends of both lengths of Cord are fitted with small Loaded Hooks. The clock weights are Boilers complete with Ends filled with lead scrap and they are attached to the Loaded Hooks.

The Clock is wound by a Bush Wheel fixed on the end of the Rod that carries the winding drums and a key can be made by bolting two $2\frac{1}{2}$" Angle Girders to a second Bush Wheel. The Angle Girders are first joined together by $\frac{3}{4}$" Bolts passed through elongated holes, and the shanks of these Bolts are then slipped through holes in the Bush Wheel and are held in place by nuts. The boss of the Bush Wheel fits in the channel formed by the Flanges of the Angle Girders, and the projecting ends of the $\frac{3}{4}$" Bolts can be inserted in holes in the Bush Wheel on the end of the winding shaft.

The Clock requires careful adjustment, but once the correct setting has been obtained it will keep good time. The Double Angle Strip 27 should be bent so that when it is horizontal and the pendulum is vertical, the lugs of the Double Angle Strip just clear the teeth of the Sprocket. When the pendulum is in motion the escapement wheel is allowed to move the space of one tooth for each swing.

The position of the Collars 32 must be adjusted so that they leave just sufficient play for the pendulum to swing freely. The clock is regulated by altering the position of the bob weight on the Screwed Rod. If the clock gains in time the position of the bob should be lowered, while if it loses time a higher position on the Screwed Rod is wanted.

Parts required to build the Clock Mechanism:- 10 of No. 2a; 2 of No. 6a; 4 of No. 8; 2 of No. 9; 1 of No. 10; 1 of No. 11; 1 of No. 13; 1 of No. 13a; 3 of No. 15b; 2 of No. 16; 9 of No. 16a; 1 of No. 16b; 2 of No. 18b; 2 of No. 22; 1 of No. 24; 3 of No. 25; 4 of No. 26; 3 of No. 27; 4 of No. 27a; 4 of No. 31; 41 of No. 37; 21 of No. 37a; 40 of No. 38; 1 of No. 40; 1 of No. 48a; 2 of No. 52; 3 of No. 53a; 2 of No. 57c; 17 of No. 59; 1 of No. 62; 2 of No. 62b; 3 of No. 63; 1 of No. 63c; 2 of No. 70; 2 of No. 76; 1 of No. 79a; 2 of No. 89b; 2 of No. 90; 1 of No. 94; 1 of No. 95a; 2 of No. 95b; 2 of No. 96; 4 of No. 109; 3 of No. 111; 1 of No. 111a; 7 of No. 111c; 4 of No. 111d; 2 of No. 126a; 3 of No. 137; 1 of No. 147a; 1 of No. 148; 1 of No. 155; 2 of No. 162; 1 of No. 162a; 2 of No. 166; 1 of No. 186.