MODEL OF THE MONTH

Meccano Paper-Folding Machine

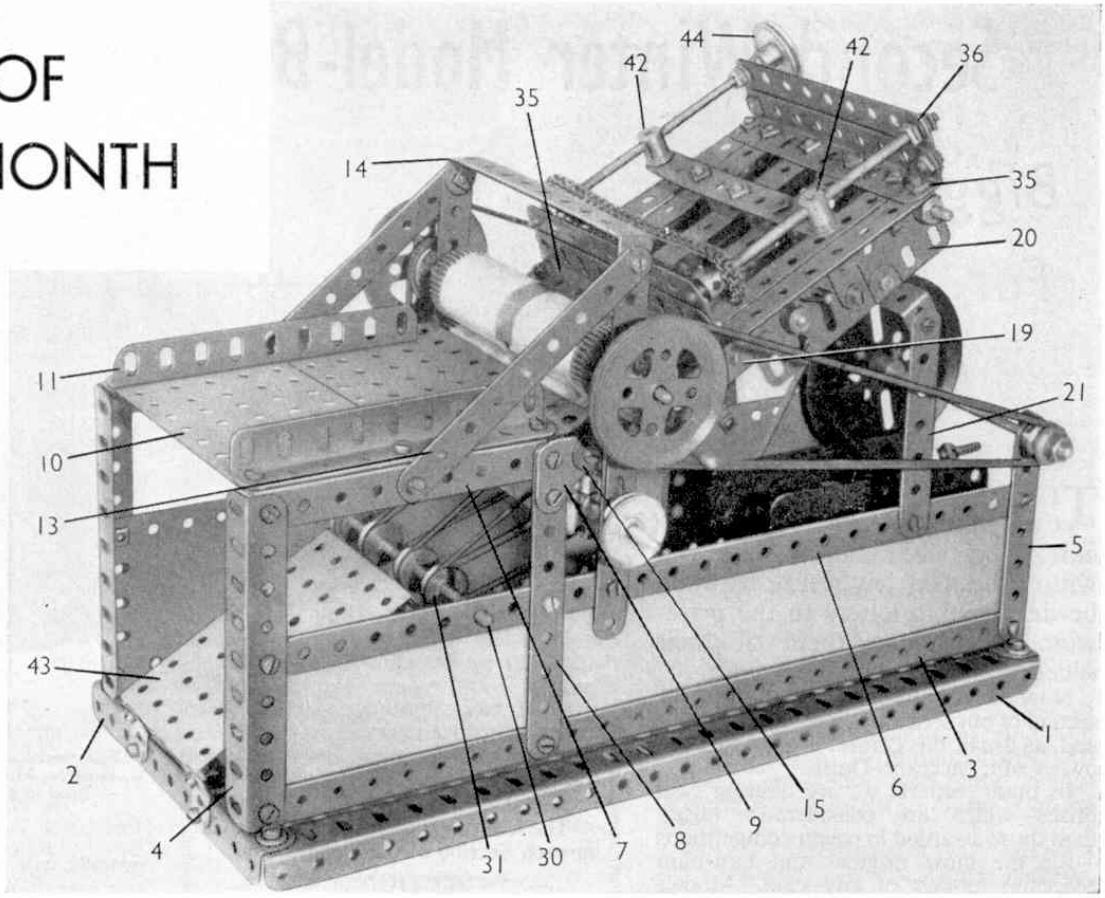

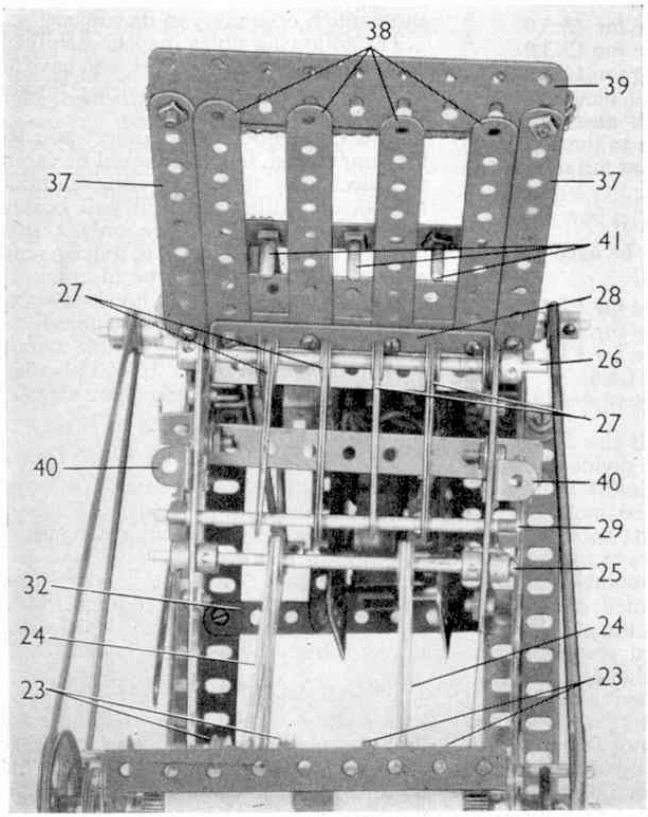

IN the "Model of the Month" series I like to include, as often as possible, models of the more unusual types, and especially models that "do something".

Regular readers will no doubt remember the Automatic Box Filling Machine, the Wire Covering Machine, Adding Machine and Automatic Penny-in-the-slot Gift Machine models that have appeared in past issues. All of these proved most popular, and it seems that this kind of model-building makes a special appeal to those who have good stocks of parts available and desire a change from the ordinary run of models such as cranes and motor vehicles, attractive as they may be.

BY SPANNER

For January, therefore, I have chosen as the "Model of the Month" a neat model Paper-Folding Machine. This is shown complete in Fig. 1 and although externally it possesses no special appeal, it is really interesting to construct. You will find that its assembly and adjustment will provide a very pleasant leisure time occupation.

By studying the illustrations on this and the opposite page you will be able to obtain some idea of how the machine works.

Fig. 1 (Top). The completed model of the Paper Folding Machine. Fig. 2 (Left) Rear view of the Machine.

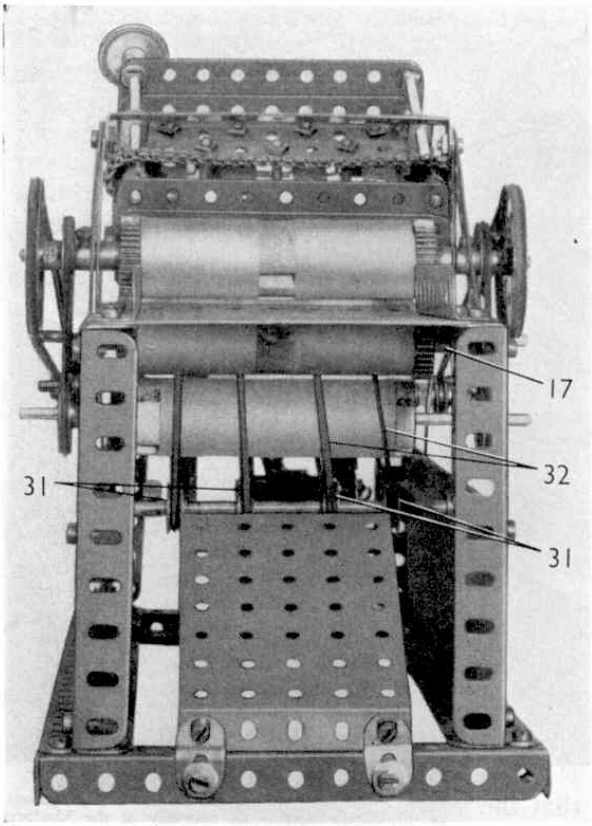

Fig. 3. The Paper Folding Machine seen from the front, or feed-in end.

It is designed to take a sheet of paper and fold it across the centre. The paper, which should measure about 3 in. × 7 in. is placed on the feed-in table 10 and pushed towards revolving rollers on the Rods 17 and 18. These carry the paper forward until it reaches the stop-pins numbered 41. The action of the rollers then causes the paper to bend slightly, and at this stage the Driving Bands numbered 32 feed it between a further pair of rollers, from which it emerges creased or folded.

Unusual Mechanical Action

This month's model is based on a machine which has quite a wide application in modern commercial life. The automatic paper folder is a necessary adjunct in many big offices. The model has the further advantage of demonstrating a somewhat unusual mechanical action, and Meccano builders should find nothing difficult in its construction.

I am quite sure that many readers will want to build this model and, as usual with these "Model of the Month" subjects, I have prepared full constructional details and any reader who would like to receive a copy free of charge has only to apply to the Editor, enclosing a 3d. stamp to cover return postage. Application should be made as soon as possible as, naturally, stocks of the instructions leaflets are not unlimited. Readers living in Canada, Australia, New Zealand, Republic of South Africa, Ceylon, Rhodesia, Italy, and United States of America, should not apply to the Editor but to our main Agents in those countries, enclosing of course suitable stamps.

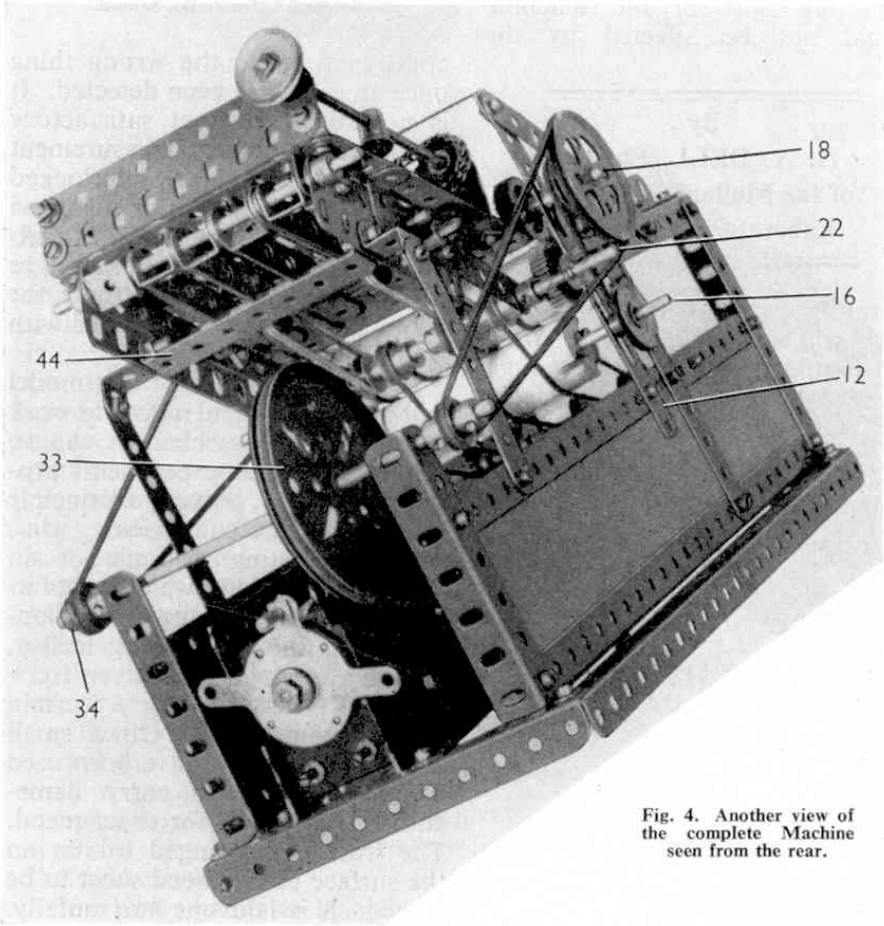

Fig. 4. Another view of the complete Machine seen from the rear.

NEW BOOK FOR PET LOVERS

Almost every youngster likes to keep a pet, whether it be a dog, cat, rabbit or small creatures such as white mice, and it is not surprising to learn that, apart from dogs and cats, there are more pet birds and other creatures in British homes than ever before. **Pet Lovers' Dictionary** by Jack Aistrop (Arco Publications, price 16/–) is a "must" for such enthusiasts. It offers advice on keeping, feeding and housing a wide variety of animals, birds, fish and reptiles, and includes useful information about societies connected with animals, legal matters, publications, and many other topics of interest to both new and experienced pet owners.

The book has the great merit of being written from personal experience, as the author, who has written many books on Nature, has kept, at one time or another, every creature mentioned in this book; and has had many successes in breeding unusual animals. Aistrop is married to Josephine Hunter, whose radio and TV programmes on animals are often based on creatures in their private collection. Now their small daughter is adding even more pet animals to the home.

Many charming line drawings by Roger Simons, and half-tone illustrations, add to the value and interest of the book.

MODEL OF THE MONTH.

PAPER FOLDING MACHINE.

Described in the January, 1962, issue of the Meccano Magazine.

Framework.

First assemble a rectangle from two 12½" and two 5½" Angle Girders 1 and 2 and then bolt two 12½" Angle Girders 3 to the 5½" Girders. To the ends of the Angle Girders 3, bolt a 4½" Angle Girder 4 and a 3½" Angle Girder 5. These are supported by a 12½" Strip Plate and a 12½" Strip 6. Now connect the 5½" Angle Girder 7 to the Angle Girder 4 and the 4½" Strip 8, placing a 1" Corner Bracket 9 at one end of the Angle Girder 7. Both sides of the machine are similar and they are joined together by two 4½" x 2½" Flat Plates 10, the front edge of the inner Plate being slightly upwards so as to clear the lower roller. Two 4½" Angle Girders 11 are bolted to the Plates as shown.

The Rollers.

On each side of the framework bolt a 5½" Formed Slotted Strip 12 and a 4½" Strip 13 to the 12½" Strip 6 joining them together at their upper ends by a 4½" x ½" Double Angle Strip 14. A 2" Formed Slotted Strip 15 is attached to the Corner Bracket 9. Now wind gummed brown paper around a Wood Roller so as to give it an even surface and cover the slots. Place the Roller on a 5" Rod 16 and secure it by Collars. Then place the Rod in the slots of the 5½" Formed Slotted Strips 12 with a 1" Pulley at each end. Two Rollers with 1" Gear Wheels at their ends, are placed on 5" Rods 17 and 18. Rod 17 is passed through the centre hole of the 5½" Formed Slotted Strip 12 and the slot of the 2" Formed Slotted Strip 15. A 1" and a 2" Pulley are fixed at each end of the Rod 18. A Driving Band is used to connect the 1" Pulley on Rod 18 to the 1" Pulley on Rod 16.

Rubber Band Paper Drive.

A 5½" Strip 19 on each side of the machine has a 3½" Flat Girder 20 bolted to it, and it is attached to the framework by a ½" x 1" Reversed Angle Bracket and a 3½" Strip 21. The Flat Girders are linked together

Contd./

by a $3\frac{1}{2}$" x $\frac{1}{2}$" Double Angle Strip 44. The $5\frac{1}{2}$" Strips 19 are mounted on the 5" Rod 22 and journalled in the 2" Formed Slotted Strips 15. On this Rod are placed six $\frac{1}{2}$" Pulley Wheels 23 and 24. A $4\frac{1}{2}$" Rod 25 positioned by four Collars carries two loose $\frac{1}{2}$" Pulley Wheels, which are driven by elastic bands from the $\frac{1}{2}$" Pulley Wheels 24. The $4\frac{1}{2}$" Rod 26, placed in the end holes of the Strips 19, carries four pairs of $2\frac{1}{2}$" Strips 27 spaced apart by a Double Bracket and a Washer, and also carries the $3\frac{1}{2}$" x $\frac{1}{2}$" Double Angle Strip 28. The $2\frac{1}{2}$" Strips 27 are now placed on another $4\frac{1}{2}$" Rod 29, held in place with Spring Clips. Four $\frac{1}{2}$" loose Pulley Wheels 31 are placed on a 5" Rod 30 and the four 10" Driving Bands 32, which pass above and below the bottom roller, and around the $\frac{1}{2}$" Pulley Wheels 23.

Drive.

An E15R or E20R Electric Motor is mounted on the $5\frac{1}{2}$" Angle Girder 2 and a $4\frac{1}{2}$" Strip 32. A $\frac{1}{2}$" Pulley on the armature shaft drives a 3" Pulley 33 on the 5" Rod 34 with a 10" Driving Band. At each end of the Rod 34 a $\frac{1}{2}$" Pulley is placed. Two 15" Driving Bands take the drive from the $\frac{1}{2}$" Pulleys to the 2" Pulleys on Rod 18.

Paper Fold Guide.

Two $4\frac{1}{2}$" Angle Girders 35 extended by a $4\frac{1}{2}$" Flat Girder 36 are bolted to two $4\frac{1}{2}$" Strips 37. A $3\frac{1}{2}$" x $\frac{1}{2}$" Double Angle Strip 28 is attached to one of the Angle Girders 35. At the same time four $4\frac{1}{2}$" Strips 38 are placed in position. The other Angle Girder 35 is extended by a $4\frac{1}{2}$" Flat Girder 39. The Double Angle Strip 28 is now placed on the Rod 26. A 1" x $\frac{1}{2}$" Angle Bracket 40 is bolted to the Strip 19 to form an adjustment for the top. Three Threaded Pins 41 are attached to a $4\frac{1}{2}$" Strip that is secured to two Threaded Bosses 42 with two spacing Washers. Two Screwed Rods, one 5" and one $4\frac{1}{2}$", are screwed through the Threaded Bosses and held in position by a pair of lock-nuts on each side of the Flat Girder 36. A $\frac{3}{4}$" Sprocket Wheel is placed on each Screwed Rod and the two are connected by Chain. A 1" Pulley is attached to the 5" Screwed Rod to form a handwheel.

Contd./

A guide platform is made by securing a $3\frac{1}{2}$" x $2\frac{1}{2}$" Flanged Plate 43 to the Angle Girder 2 with Obtuse Angle Brackets.

Operation of Model.

The Motor is switched on and a piece of paper, size about 3" x 7" is placed on the platform 10 and pushed towards the revolving rollers on Rods 17 and 18. The paper then travels forward, until it reaches the stop pins 41. The rollers tending to carry the paper forward, cause the paper to bend slightly and the Driving Bands 32 take the paper between the bottom and middle rollers. As it passes through these rollers the paper is folded, the rollers putting in the crease.

If the fold is not in the centre of the paper, the stop pins 41 should be adjusted by means of the 1" Pulley 44, either nearer or farther away from the rollers as the case may be.

Parts required to build the Paper Folding Machine:- 2 of No. 1; 2 of No. 2; 12 of No. 2a; 2 of No. 3; 7 of No. 5; 4 of No. 8; 2 of No. 9; 8 of No. 9a; 2 of No. 9b; 2 of No. 10; 5 of No. 11; 2 of No. 12b; 4 of No. 14; 2 of No. 15a; 1 of No. 19b; 2 of No. 20a; 5 of No. 22; 6 of No. 23; 9 of No. 23a; 4 of No. 31; 4 of No. 35; 84 of No. 37a; 75 of No. 37b; 30 of No. 38; 1 of No. 48c; 2 of No. 48b; 1 of No. 53; 2 of No. 53a; 2 of No. 55; 2 of No. 55a; 12 of No. 59; 2 of No. 64; 1 of No. 80; 1 of No. 80b; 1 of No. 94; 2 of No. 96a; 3 of No. 103c; 2 of No. 103d; 3 of No. 106; 2 of No. 111c; 4 of No. 115; 2 of No. 125; 2 of No. 133a; 6 of No. 186a; 1 of No. 186b; 2 of No. 186d; 2 of No. 197; 1 E15R or E20R Electric Motor, 6 Elastic Bands (obtainable from Newsagents and Stationers).