New Meccano Models

Spring Balance and Streamlined Locomotive

THE two models we describe and illustrate this month are unusually attractive, and at the same time provide an interesting contrast with each other. One is a spring balance that can actually be used for articles that weigh up to about 8 oz. The other is a handsome miniature of the streamlined L.N.E.R. locomotive *"Sir Nigel Gresley,"* the 100th "Pacific" built by the famous locomotive designer whose name it carries.

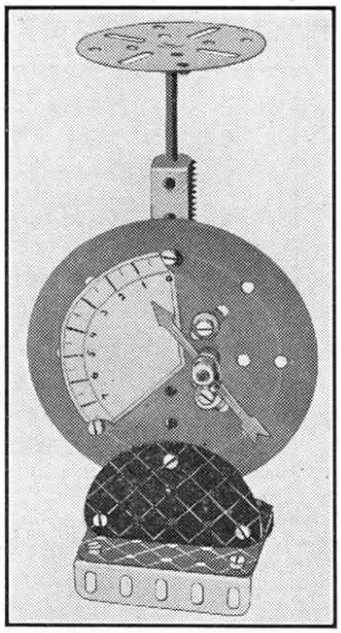

Fig. 1. A useful spring balance.

The balance is the simpler of the two models. It is shown in Figs. 1 and 3, and its construction is commenced with the base. A 2½″×2½″ Flat Plate is bolted to two 2½″ Angle Girders, and a similar Angle Girder is then secured to the base and has a Semi-Circular Plate attached to it. A 4″ diam. Circular Plate and a 4½″×½″ Double Angle Strip 1 are fixed to the Semi-Circular Plate, the Double Angle Strip forming the bearings for a 6½″ Rod 2, which carries at its upper end a Face Plate that serves as the scale pan. This Rod also carries three Collars, to the upper pair of which is bolted a 3½″ Rack Strip 3. The Rack Strip engages a ½″ Pinion 4, fixed on the end of a 1½″ Rod journalled in the Circular Plate and a Double Arm Crank. The other end of this Rod carries a Pointer.

When a letter or other article is placed on the pan the 6½″ Rod compresses two Compression Springs 5 on the Rod 2. The Rack Strip is maintained in engagement with the Pinion by a 2″ Strip 6 bolted to a Double Bracket attached to the Circular Plate.

Parts required to build model letter balance: 1 of No. 6; 3 of No. 9d; 1 of No. 11; 1 of No. 14; 1 of No. 18a; 1 of No. 26; 14 of No. 37a; 16 of No. 37b; 11 of No. 38; 1 of No. 48c; 4 of No. 59; 1 of No. 62b; 1 of No. 72; 1 of No. 109; 1 of No. 110; 2 of No. 120b; 1 of No. 146a; 1 of No. 156; 1 of No. 214.

A general view of the model locomotive is shown in Fig. 4, and Fig. 2 shows what it looks like underneath. It is driven by either an E1 or an E120 Electric Motor. The chassis is the first part to build. Two 9½″ Strips 1 are spaced apart by two 2½″×2½″ Flat Plates 2, and are connected to 12½″ Flat Girders 3 at each side by ½″×½″ Angle Brackets. Two 5½″ Angle Girders are attached to the Plates 2, and 5½″ Flat Girders fixed to these by 1½″ Strips form the bearings for the axles of the driving wheels, which are 2″ Pulleys mounted on 1½″ Rods. They are linked together by 5½″ Strips lock-nutted to them, but are spaced from the Pulleys by three Washers.

The front of the engine is now built up and the valve gear connected to the centre pair of driving wheels, but the Plates covering the boiler are not bolted in position until the Electric Motor is fixed in the chassis.

The 12½″ Flat Girders 3 are extended 1″ to the rear by two 2″ Flat Girders bolted to them. An E1 or E120 Electric Motor 4 is bolted by one of its flanges to one of these compound Flat Girders, and also is attached by a ½″ Reversed Angle Bracket to the rear Flat Plate 2, and by a 1″×½″ Angle Bracket to the Flat Girder 3. The drive from the Motor is taken from the Motor pinion to a 57-teeth Gear mounted on a 2″ Rod journalled in the Motor sideplates. This Rod also carries a ½″ fast Pulley that is connected by a 6″ Driving Band to a 1″ Pulley mounted on a 1″ Rod journalled in Trunnions bolted to the Strips 1. A 2½″ Driving Band links this Rod with a 1″ Pulley 5 on the axle of the centre driving wheels.

The casing for the rear bogie consists of two 2½″ Flat Girders spaced by two 1½″×½″ Double Angle Strips. Two 2½″×1½″ Flexible Plates are bolted to the Double Angle Strips and bent round and secured to the ends of the Flat Girders by ½″×½″ Angle Brackets. Two loose 1″ Pulleys are lock-nutted to the sides of the casing, which is then pivoted to a ½″ Reversed Angle Bracket bolted to the Motor sideplates.

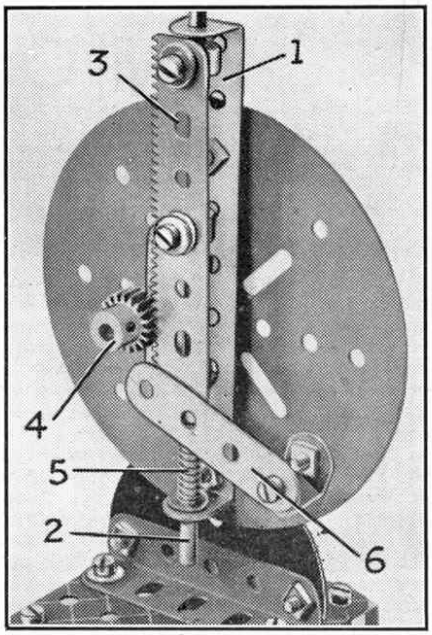

Fig. 3. Rear view of the spring balance.

The model is completed by bolting the boiler plates to a 12½″ Strip, which is arranged down the centre top of the boiler and bent so that its forward end may be attached to the buffer beam. The cab is built from 2½″×1½″ Flexible Plates bolted to the compound flat girders and attached at their upper ends to a large radius Curved Plate.

Suitable straight and large radius Curved Rails for the locomotive may be constructed from Angle Girders and Strips connected by Screwed Rods. A centre rail is then secured between these, but is insulated from them, and arranged to contact a current collector formed with a piece of springy brass and fixed to the locomotive chassis. The collector is insulated from the chassis and is connected by wire to the insulated terminal of the driving Motor.

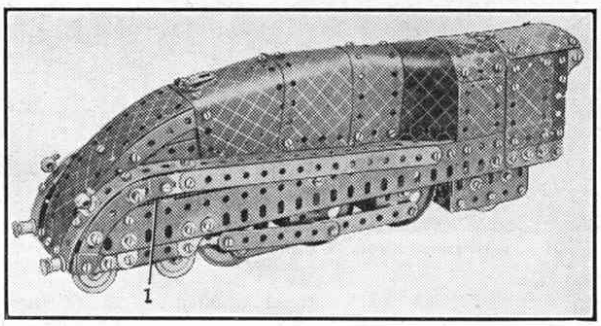

Fig. 4. An attractive streamlined locomotive driven by an Electric Motor.

It is important to make sure that all the wheels are in correct alignment and rotate freely in their bearings.

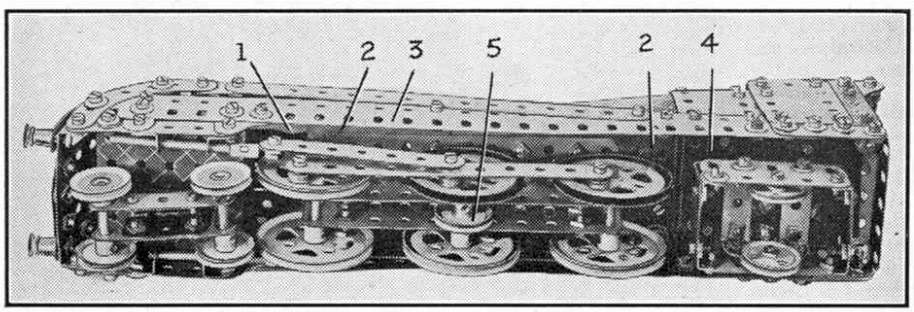

Fig. 2. An underneath view of the streamlined locomotive shown in Fig. 4.

Parts required to build streamlined locomotive: 1 of No. 1; 2 of No. 1a; 6 of No. 1b; 2 of No. 2; 2 of No. 2a; 2 of No. 3; 2 of No. 4; 7 of No. 5; 2 of No. 6; 4 of No. 6a; 2 of No. 9; 2 of No. 9d; 5 of No. 10; 27 of No. 12; 1 of No. 12b; 4 of No. 12c; 2 of No. 16a; 1 of No. 17; 3 of No. 18a; 3 of No. 18b; 6 of No. 20a; 6 of No. 22; 2 of No. 22a; 1 of No. 23a; 1 of No. 27a; 190 of No. 37a; 180 of No. 37b; 54 of No. 38; 1 of No. 47; 3 of No. 48; 1 of No. 48a; 1 of No. 59; 3 of No. 72; 1 of No. 77; 2 of No. 89a; 2 of No. 89b; 2 of No. 90; 2 of No. 103; 2 of No. 103b; 2 of No. 103f; 2 of No. 103g; 2 of No. 111a; 8 of No. 111c; 2 of No. 120a; 2 of No. 125; 2 of No. 126; 4 of No. 133a; 2 of No. 136; 1 of No. 160; 1 of No. 186; 1 of No. 186a; 6 of No. 188; 4 of No. 189; 2 of No. 190a; 2 of No. 192; 1 of No. 200; 2 of No. 212; 1 E1 or E120 Electric Motor.

Suggestions Section

By "Spanner"

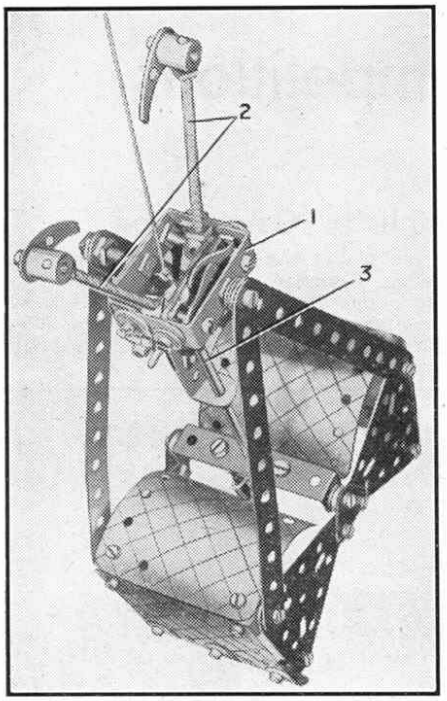

Fig. 523.

(523) Single Suspension Grab

(N. C. Ta'Bois, Woodford Green)

The framework of the useful grab shown in Figs. 523 and 523a consists of two $1\frac{1}{2}'' \times \frac{1}{2}''$ Double Angle Strips 1 joined by Flat Brackets. Two Washers are put on the Bolts and one of them carries a Hinge against which bears a piece of Spring Cord. A Flat Trunnion is held by two $\frac{1}{2}''$ Bolts.

Each of the hooks 2 is a Screwed Rod to which a Pawl without boss is attached by means of a Threaded Boss. One of the Rods is 3″ long and the other $3\frac{1}{2}''$, and each carries a "spider" as shown. The "spiders" are screwed partly on to the $\frac{1}{2}''$ Bolts already mentioned, and further $\frac{1}{2}''$ Bolts fastened to them are free to turn in the holes of the Double Angle Strips. Flat Brackets, one of which is cranked, are fastened to the Bolts. A Bolt on the cranked Bracket protrudes into the elongated hole of the other Bracket. A piece of Spring Cord attached to the base of the hooks is just strong enough to pull them together.

A Washer is placed on a $\frac{3}{4}''$ Bolt, which is passed through the Hinge and carries four more Washers, a Collar and a Nut. A $\frac{1}{2}''$ Bolt is screwed into the Collar and bears against the $3\frac{1}{2}''$ Screwed Rod. A Collar on a 5″ Axle Rod 3 just touches the tip of the $\frac{3}{4}''$ Bolt when the hooks are on the suspender ring 4, and has a slightly bent Flat Bracket secured to it by a $\frac{7}{32}''$ Grub Screw. The 5″ Rod slides in a $1\frac{1}{2}'' \times \frac{1}{2}''$ Double Angle Strip bolted to a 3″ Strip fixed to the Flat Trunnion. The lower end of the Rod passes through a $2\frac{1}{2}'' \times \frac{1}{2}''$ Double Angle Strip and is free to slide up and down, but is prevented from turning by an Eye Piece and a $1'' \times \frac{1}{2}''$ Angle Bracket.

The suspender ring 4 is a 1″ fast Pulley to which a Socket Coupling and a Coupling are attached. A Sleeve Piece passes over the two Couplings, and a second Coupling is attached to the first by a Flat Bracket.

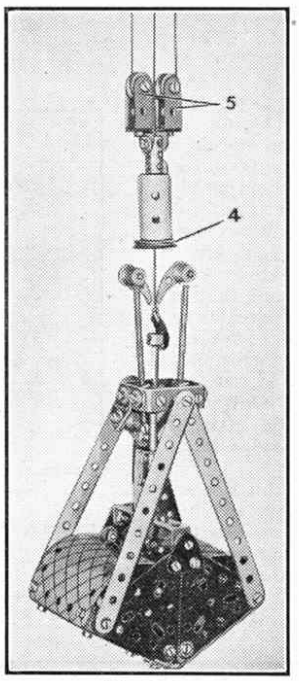

Fig. 523a.

(524) Automatic Wool Winder

(R. C. Smith, Hawera, New Zealand)

I received recently details of a useful wool winder designed by R. C. Smith, Hawera, N. Zealand. I had the model built up and it is reproduced in Fig. 524. It will wind a ball of wool direct from a skein, and if desired it may be used in conjunction with a model revolving skein holder.

The construction of the winder is commenced with the base. An E6 or E20B Electric Motor is bolted to two of three $5\frac{1}{2}''$ Angle Girders that are secured at their ends to $9\frac{1}{2}''$ Angle Girders 1. The bearings for the winding drum consist of Cranks bolted to the upper ends of a 3″ and a $7\frac{1}{2}''$ Angle Girder 2. The Girder 2 is attached to a $4\frac{1}{2}'' \times 2\frac{1}{2}''$ Flat Plate 3 fixed to one of the side-members of the base, and is braced by a $5\frac{1}{2}''$ Strip. This Strip is bolted to the Angle Girder and to a $4\frac{1}{2}''$ Angle Girder attached to an Architrave.

The gearing that drives the winding drum and the reciprocating guide arm through which the wool passes, is as follows. A Worm 4 on the armature shaft of the Motor meshes with a 57-teeth Gear 5 mounted on a 2″ Rod that also carries a $\frac{7}{8}''$ Bevel Gear. This Gear meshes with a similar gear on a $4\frac{1}{2}''$ Rod 6, which also carries a $\frac{1}{2}''$ Pinion, and a 1″ Sprocket that is connected by a length of Sprocket Chain to a similar Sprocket mounted on a $6\frac{1}{2}''$ Rod forming the winding drum. The wool is fastened to a Cord Anchoring Spring on this Rod.

The reciprocating motion for the guide arm is operated by a Triple-Throw Eccentric mounted on a 4″ Rod 7 journalled in a $2\frac{1}{2}'' \times 1''$ Double Angle Strip bolted to the Plate 3. This Rod is driven from the Motor through a $1\frac{1}{2}''$ Contrate Wheel meshing with the $\frac{1}{2}''$ Pinion on the Rod 6. The Eccentric is pivotally connected to a large Fork Piece that carries an 8″ Rod, the lower end of which is pivoted on a 1″ Rod passed through the centre hole of a $4\frac{1}{2}'' \times \frac{1}{2}''$ Double Angle Strip bolted between the Girders 1. At its upper end the 8″ Rod carries a Rod and Strip Connector through the eye of which the wool is passed.

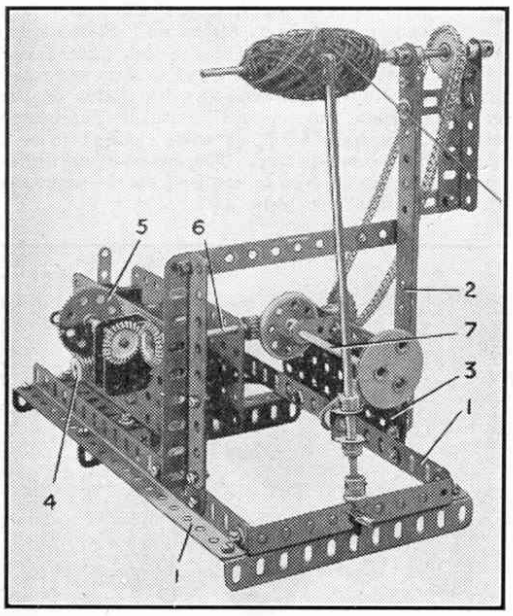

Fig. 524.

(525) An Aircraft Locator Apparatus (D. Perkins, Hull)

Fig. 525 shows an instrument designed to trace the course of an aeroplane on a map attached to a Ring Frame that forms the base of the model. Construction of the device is quite simple. A Coupling is free to slide along the Rods 3 and is connected by means of four 1″ Screwed Rods to two $1\frac{1}{2}''$ Corner Brackets 4, the left-hand one of these being bolted to a $6\frac{1}{2}''$ Rack Strip 5. A movable unit is built up from a $1\frac{1}{2}''$ and a 2″ Strip joined by a 3″ Screwed Rod 6, and is attached to Collars that slide up and down $4\frac{1}{2}''$ Rods fixed (Continued on page 332)

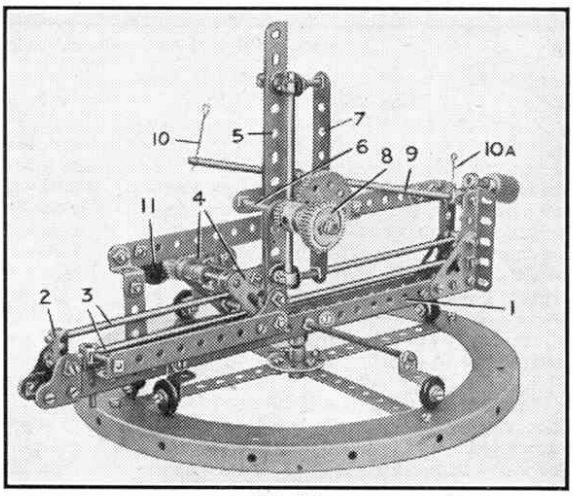

Fig. 525.

Meccano Model-Building Competitions

By "Spanner"

"Autumn" Model-Building Contest

No keen Meccano model-builder ever grumbles at the vagaries of the British climate. On the wettest day he is just as happy as on the sunniest. True, he can try out his model motor car down the garden path when the sun is shining, or he can span the path with a fine Meccano bridge, but there are even more interesting things to be done indoors when the weather is bad, and during the long autumn and winter evenings Meccano becomes even more exciting. Meccano boys then settle down to work in real earnest, looking round for "new worlds to conquer," and that is one reason why I expect a bumper entry in this month's special model-building competition. Another is that models may represent any desired subject and may be constructed from any size of Outfit or number of parts, while to add to the attractions of the contest the rules have been made as simple as possible.

Readers of any age living in the British Isles or Overseas can take part in this competition, and I advise all who enter to try and incorporate in their models some ingenious use for a Meccano part or some novel movement. Models displaying originality of this kind, no matter how simple they may be, will stand the best chances of winning the prizes.

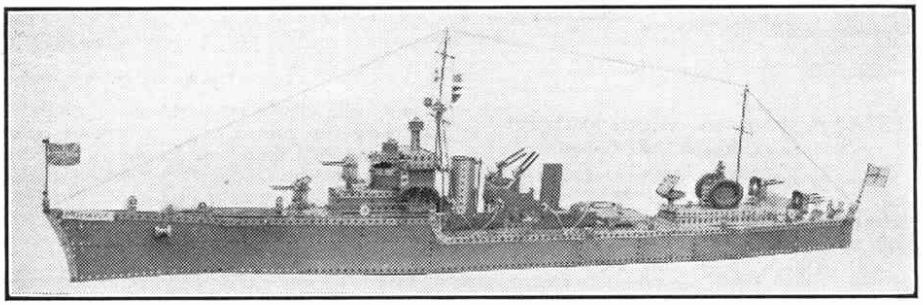

A realistic model of H.M.S. "Mohawk" built by S. Hall, Bingley.

When the model is completed a photograph of it should be prepared, but if this is not possible a good sketch will do. The competitor's age, name and address should be written on the back of the illustration, and it should be sent, together with a brief description of the model, to *"Autumn" Model-building Competition, Meccano Ltd., Binns Road, Liverpool 13.*" That is all there is to do, but it should be noted that all models submitted must be the competitor's own work. The closing date is 31st December.

The following prizes will be awarded for the most interesting and well-built models submitted: First, Cheque for £2/2/–. Second, Cheque for £1/1/–. Third, Cheque for 10/6. There will also be a number of consolation prizes.

Competitors who would like to have their photographs or drawings returned to them after the entries have been judged should enclose a stamped addressed envelope for that purpose. Photographs or drawings of prize-winning entries will not be returned.

Prize-winners in our "Simplicity" Competition

The results in the Overseas section of the "Simplicity" Model-building Contest, details of which were announced in the February and March issues of the "*M.M.*," are as follows:

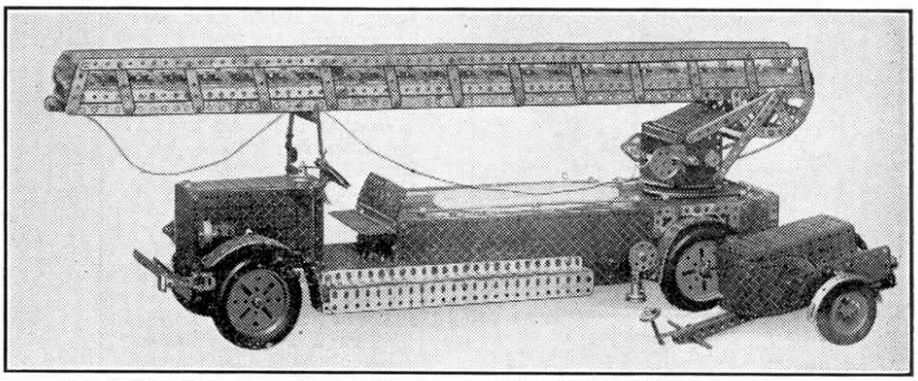

C. Scott, Wakefield, won a prize in a Meccano competition for this well-proportioned fire-escape.

1st Prize, Cheque for £2/2/–: P. Yonge, Moss Vale, Australia; 2nd, Cheque for £1/1/–: J. Lusty, Masterton, New Zealand; 3rd, Cheque for 10/6: H. Charles, Edmonton, Canada.

Consolation Prizes of 5/–: G. Myburgh, Claremont, S. Africa; R. Topham, Bombay; P. Smith, Capetown.

First and Second Prizes in this Contest were awarded for simple but realistic models of living creatures. P. Yonge won the First Prize with a jolly little model of a toucan, a brilliantly-coloured tropical bird that has an enormous beak. In the model the head is a Pawl bolted to a Flat Bracket and attached to a ½" Pulley that represents the bird's body. A Centre Fork held in a Collar attached to the Pulley makes a realistic tail, and a particularly novel feature is the use of links of Sprocket Chain, opened out and bent around a Rod, to represent the bird's claws gripping a perch. This model owes its success to the high degree of realism attained, which is due to a really clever arrangement of the few Meccano parts used in its construction.

Second Prize went to J. Lusty, who submitted a model spaniel dog. Two Flat Trunnions representing the head of the animal are bolted to each side of a U-section Curved Plate, and the pronounced ears peculiar to these dogs are represented by 2½" Cranked Curved Strips attached to the Trunnions. The animal's legs are 2½" Strips, and its tail also is a 2½" Strip bent to the required shape.

Third Prize was awarded to H. Charles for a sturdily-constructed model field gun, the undercarriage and shield of which are built from a 3½" Strip bolted to a Flat Trunnion that is attached to two 1½" Flat Girders overlapped. The gun carriage wheels are 1" Pulleys fitted with Rubber Rings, and they are mounted on a 2" Rod. The gun barrel, a 3" Rod, carries at its front end a Rod Connector, and a Collar is placed on it against the shield. A small Fork Piece that holds a ½" Bolt in its arms represents the recoil chamber.

A consolation prize was awarded to G. Myburgh for an interesting model of a radiogram, which is well designed but does not display any really novel use of the parts it incorporates. The cabinet is constructed from Strips and Flat Plates, and is fitted with a hinged top. The various control knobs consist of Collars mounted on Rods journalled in the plates of the cabinet, and the station dial is illuminated by a bulb supplied with current from a flash-lamp battery. The compact nature of the model may be realised by the fact that it measures only 4½" × 4½" × 3½".

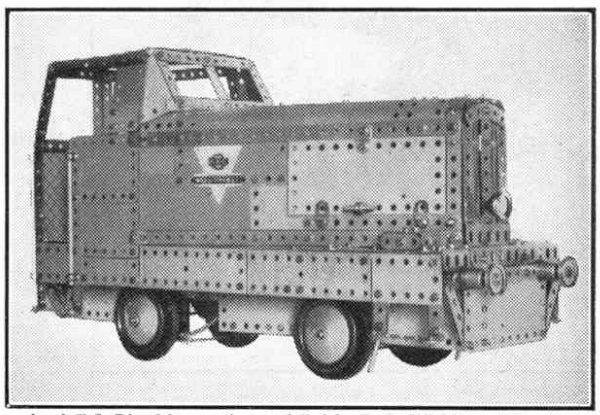

An A.E.C. Diesel locomotive modelled by P. R. Wickham, Leicester.