The Month's New Model

A Front Wheel Drive Chassis

THE new Meccano model to be described this month represents a motor car fitted with the Alvis type of front wheel drive transmission. It is fitted with a very compact three-speed and reverse gear-box, a neat single plate clutch, and internal expanding brakes on all four wheels.

The model is commenced by building the chassis, the construction of which is shown in Figs. 1 and 4. The front springs can be seen in Fig. 4, showing an underneath view of the model before the gear-box and Motor unit is mounted in place. They are constructed in the following manner. There are four three-leaf springs of the quarter elliptic type on each side of the chassis, each consisting of one 2″, one 1½″ Strip, and one Flat Bracket bolted at one end to the chassis. The other ends of the springs terminate in Hinges secured to the frame 1, which consists of two 1½″ × ½″ Double Angle Strips and two 1½″ Strips, the Strips being spaced away from the ends of the Double Angle Strips by Washers.

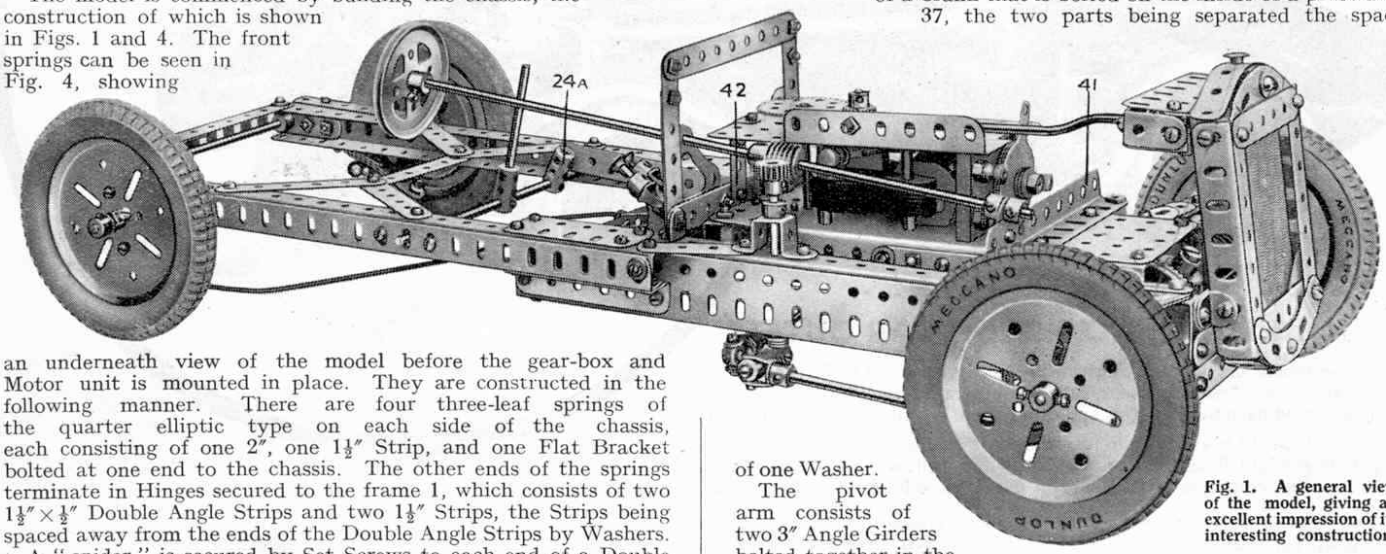

Fig. 1. A general view of the model, giving an excellent impression of its interesting construction.

A "spider" is secured by Set Screws to each end of a Double Arm Crank 2, the lower spider being packed out from the Crank by two Washers, while the upper one is fitted flush against the Crank. The Double Arm Crank is retained in the frame by means of a 1″ Rod and a Threaded Pin inserted in the upper and lower spiders respectively. They are secured in the spiders by Grub Screws, and four Washers serve to space the upper spider, and one Washer the lower spider, from the frame.

The universal-coupling drive to each of the front wheels consists of a 1″ Threaded Rod 6 forming the stub axle to which are secured, by lock-nuts, two ½″ × ½″ Angle Brackets, the slotted portions of which must be parallel to one another. The whole unit must be secured very rigidly to the Rod. The arms of the Angle Brackets are bent slightly towards one another. The end of a 2″ Rod 5 carries a Collar, and this is mounted loosely between the Angle Brackets by passing Set Screws through the slotted holes and screwing them home, in the tapped holes of the Collar, until the Rod 5 is nipped by them. The stub axle is inserted in the boss of the Double Arm Crank 2, and the road wheel is then secured to its end by duplicate Set Screws. It will be found, the centre of the universal coupling is practically coincident with the centre line of the pivot pin, and that the latter, when produced, falls within ¼″ of the centre of the wheel track.

A Crank 3 is fixed rigidly to the end of each 1″ Rod pivot as shown in Fig. 4, and a 5″ Rod acts as a drag link by connecting the Crank to a Swivel Bearing 4, which is mounted on a ½″ Bolt held in the end bore of a Coupling. The Coupling is secured in its end transverse bore to a Rod journalled in the chassis girders and carrying at its upper end a ½″ Pinion. This Pinion will mesh eventually with a Worm on the steering column. A 1″ Rod 4a is fixed in the centre transverse bore of the Coupling, and this is attached to the track rod by a Swivel Bearing.

The next item that requires our attention is the rear wheel suspension and the brakes. This is shown in detail in Fig. 2, which is a view taken from underneath the chassis and with the road wheel removed from its stub axle. The spring 38 is of the cantilever type, and it consists of one 3½″, one 3″, one 2½″ and one 2″ Strip, all bolted together at one end to a 1½″ Angle Girder 39 fixed to the chassis. The stub axle is secured in the boss of a Crank that is bolted on the inside of a pivot arm 37, the two parts being separated the space of one Washer.

The pivot arm consists of two 3″ Angle Girders bolted together in the form of a channel section, and mounted freely at one end on a Rod that passes through the chassis. A 3″ Strip is bolted over the slotted holes of one of the Girders to provide a bearing for the pivot. The arm is connected to the spring by means of a Flat Bracket 40, which is attached pivotally by a lock-nutted Bolt to a ½″ × ½″ Angle Bracket on the spring. The other end of the arm is inserted in the space between the Crank holding the stub axle and the pivot arm, the stub axle being passed through the hole in the Flat Bracket.

The brake is of the internal expanding type, and consists of two 2″ Strips mounted together at one end on a Bolt locknutted in the centre hole of a 1½″ Strip. The end hole of the 1½″ Strip is attached pivotally to the arm 37 and the other end is fitted with a Handrail Support. The 2″ Strips, carrying the Collars that form the brake shoes, ride in the groove of a 1″ fast Pulley 36 that is loose on the stub axle, and the Strips are retained in the groove by a short length of Spring Cord fitted as shown in Fig. 2. By moving the 1½″ Strip to the left the 2″ Strips are forced apart, and consequently the Collars are pushed against the rim of a Wheel Flange forming the brake drum, which is bolted to the road wheel.

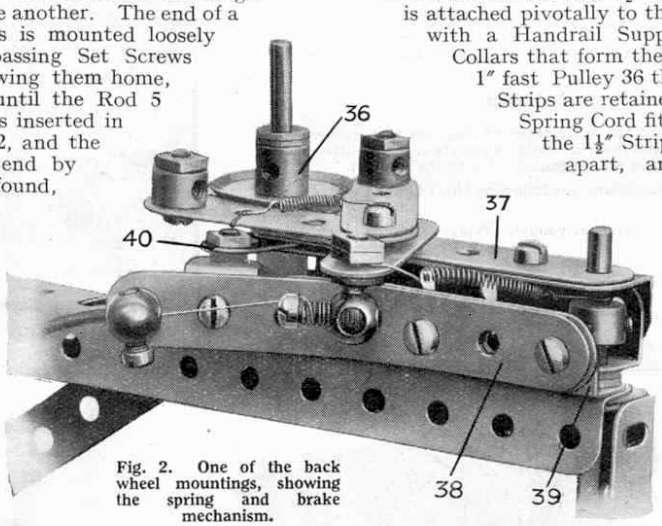

Fig. 2. One of the back wheel mountings, showing the spring and brake mechanism.

The 6-volt Motor, gear-box, clutch, differential, and front brakes, shown in Fig. 3, all form part of a compact unit. Each of the gear-box side plates consists of a 4½″ Flat Girder, that on the far side of the Motor being bolted to the flange of the Motor by its slotted holes, and the one on the near side being attached to a 4½″ Angle Girder spaced away from the Motor side plate by three 2″ Strips.

The Rod 8 is journalled in three bearings, a 2½″ Flat Girder 33a, a 2½″ × 1″ Double Angle Strip 8a, and a 2½″ Strip 7. The Double Angle Strip 8a is bolted to the side plates of the gear-box and it carries a Flat Trunnion in the top hole of which one end of the layshaft is journalled. The Strip 7 is one of two that are secured to the gear-box sides by means of ½″ × ½″ Angle Brackets. The Rod

15 runs in the second of the Strips 7, and also in another $2\frac{1}{2}'' \times 1''$ Double Angle Strip, which carries a Flat Trunnion forming a bearing for the other end of the layshaft. Two Washers are placed under the heads of each of the Bolts, retaining the Trunnion in place so that the shanks of the Bolts do not foul the face of the 1″ Gear 20. It is very important that all the bearings should be in alignment, especially those in which the Rod 8 runs, for as there are three bearings, alignment has to be very carefully carried out if the Rod is to run easily.

The clutch is of the single plate type and consists of a $1\frac{1}{2}''$ Contrate Wheel 9 free on the Rod 8, which is driven from the Motor armature spindle through a reduction gear of 3 : 1. The floating plate consists of a $\frac{1}{2}''$ loose Pulley fitted with a $\frac{5}{8}''$ Rubber Ring, and is pressed against the face of the Contrate Wheel by a $\frac{3}{4}''$ Flanged Wheel mounted in a Socket Coupling which represents the withdrawal plate. A Collar 10 is secured to the Rod in such a manner that its Grub Screw is always in engagement with the slot of the Socket Coupling, thus permitting limited longitudinal movement to the unit and at the same time allowing it to rotate the Rod. Half of a Compression Spring is placed between the Collar and the recess in the Socket Coupling in order to keep the parts of the clutch in contact. The Contrate 9 is prevented from moving away from the withdrawal plate by a Collar secured on the Rod.

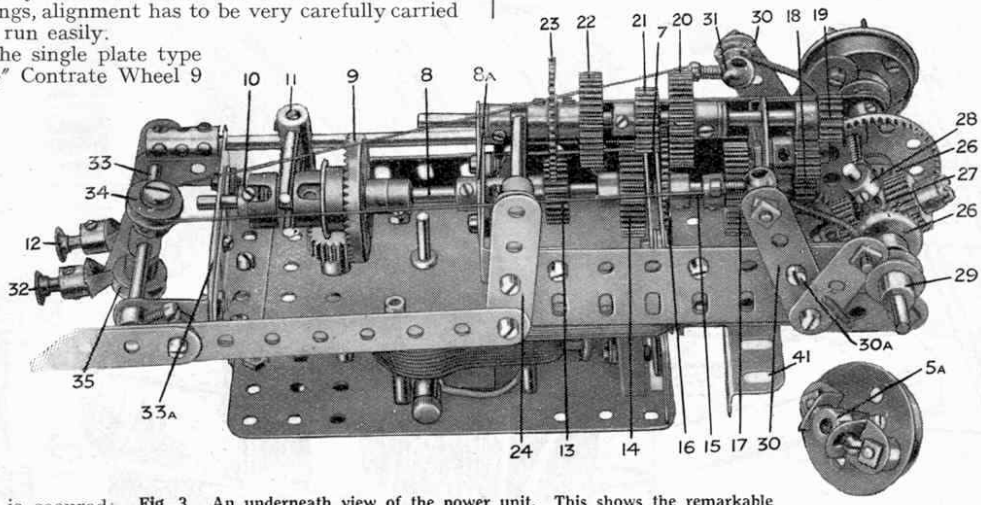

Fig. 3. An underneath view of the power unit. This shows the remarkable compact appearance of the clutch, gear-box, differential, etc.

The clutch withdrawal mechanism consists of a Rod sliding in suitable bearings and carrying at one end a Coupling to which is attached a 2″ Strip. This Strip pivots on the end of a Rod 33 and its upper end carries the clutch pedal proper 12. A Coupling 11 secured to the Rod carries also two short Rods that engage with the groove of the Socket Coupling.

The differential, as will be seen from Fig. 3, is not the same as that in the standard chassis, on account of space. Two $\frac{3}{4}''$ Contrate Wheels 26 are secured on the ends of two separate Rods, the outer ends of which are journalled in the ends of the gear-box side plates, and the inner ends in the longitudinal bore of a Coupling. The $\frac{3}{4}''$ Pinions 27 mesh with the Contrates, and are mounted freely on Pivot Bolts inserted in the centre tapped holes of the Coupling, and screwed home sufficiently to grip a Rod in the centre transverse hole of the Coupling. This Rod carries, at each end, Collars 28 in which are inserted 1″ Screwed Rods. A $1\frac{1}{2}''$ Contrate, free to revolve on its Rod, is locked to the Screwed Rods, and is spaced from the adjacent $\frac{3}{4}''$ Contrate by two Washers.

The front brakes work in a similar manner to the rear brakes, but they are designed on a smaller scale. In Fig. 3 the brake drum on the near side has been removed in order to show internal details of the brake. It will be seen that the brake operating lever is a 2″ Strip 30 pivoted on a Bolt 30a with two $1\frac{1}{2}''$ Strips mounted pivotally at its lower end. The $1\frac{1}{2}''$ Strips ride in the groove of a $\frac{1}{2}''$ fast Pulley 29 that is loose on the Rod, and the Bolt shanks on their ends bear on the inside rim of the Flanged Wheel forming the brake drum, when the Strip 30 is moved to the left. Four Washers space the Flanged Wheel away from the boss of the $\frac{1}{2}''$ fast Pulley.

The brake pedal 32, Fig. 3, consists of a Buffer Shank and an End Bearing bolted to the end of a Crank on the Rod 33. The two $\frac{1}{2}''$ fast Pulleys 34 and 35 are mounted on Pivot Bolts that are screwed into a Collar on the Rod 33 until the Rod is gripped by them. The brake-operating wire is passed round the Pulley 34 so that its ends may be attached to $\frac{3}{8}''$ Bolts inserted in the tapped holes fo Handrail Supports 31 on the upper extremities of the brake operating levers. By this arrangement both brakes are applied with equal force. Adjustments may be carried out by turning the $\frac{3}{8}''$ Bolts in the Handrail Supports 31.

The back brakes are actuated in a similar manner, the controlling wire passing round the Pulley 35 so that, on depressing the pedal, a simultaneous application of the four brakes is made. Owing to the vertical movement of the back wheels, the control wire must pass through an outer flexible sheath on the Bowden cable principle. This sheath is composed of Spring Cord, and its manner of attachment should be clear on reference to Figs. 2 and 4. A stop consisting of a $\frac{3}{8}''$ Bolt inserted in a Collar comes in contact with a fixed Bolt shank in order to limit the movement of the brake pedal shaft 33.

The brake control cables consist of the wire taken from the inside of a length of electric light flex.

The gear change lever is carried on a cross shaft that is journalled in the chassis girders, and is prevented from free rotation by means of a Spring Clip mounted on the Rod so that its lugs press against a $\frac{1}{2}'' \times \frac{1}{2}''$ Angle Bracket bolted to the inside of the chassis girder. The Coupling 24a on the cross shaft is connected by means of a Strip to a 2″ Strip 24 pivoted on the side of the gear-box. The upper end of this Strip has a Rod attached to it by a Crank, and the Rod locates between the boss of the Gear 23 and a Collar on the layshaft, so that on moving the gear lever the layshaft is slid longitudinally in its bearings.

The main features of the radiator will be seen in Fig. 1, but a point that requires stressing is the method of mounting the radiator tubes. The tubes consist of a number of lengths of Spring Cord each of exactly the same length and provided with a loop at each end. The loops are threaded on to two Rods that are slipped under the projecting shanks of $\frac{3}{8}''$ Bolts situated at the bottom of the radiator. When the Spring Cord is in place their turns should present a slightly extended appearance and the lengths be correctly and equally spaced on the Rods.

The water tank consists of two 3″ Flat Girders bolted to Double Brackets at the rear of the radiator proper, and the sides are filled in by a 3″ Strip and two $1'' \times \frac{1}{2}''$ Angle Brackets. The radiator cap is a Buffer Shank and the two lower corners of the radiator are filled in by 1″ Triangular Plates, which are held in place by two $\frac{3}{4}''$ Bolts.

The gear-box is mounted on the three point suspension system. The Girder 41, Fig. 3, is bolted securely to the gear-box and frame, but Girder 42 is attached by one Bolt only to the gear-box.

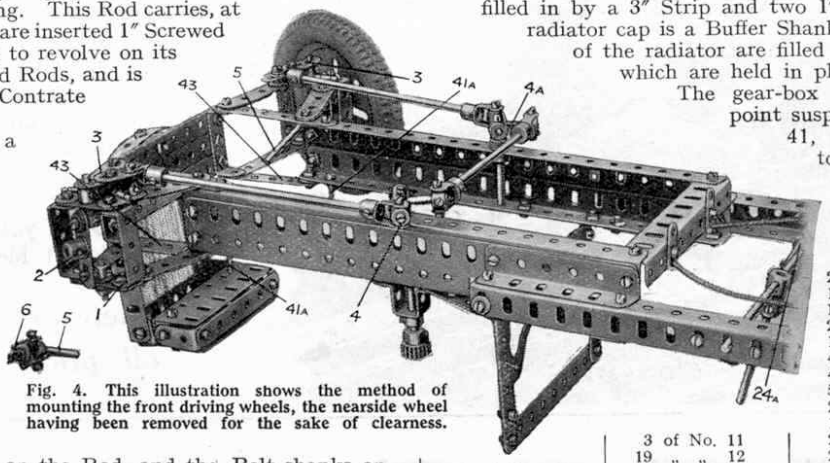

Fig. 4. This illustration shows the method of mounting the front driving wheels, the nearside wheel having been removed for the sake of clearness.

Parts required:

1 of No. 2	3 of No. 11	2 of No. 20	1 of No. 72
6 „ „ 2a	19 „ „ 12	1 „ „ 20a	2 „ „ 77
4 „ „ 3	2 „ „ 12b	1 „ „ 20b	4 „ „ 82
16 „ „ 4	1 „ „ 13	2 „ „ 22	3 „ „ 89a
6 „ „ 5	1 „ „ 13a	1 „ „ 23	2 „ „ 103a
23 „ „ 6	1 „ „ 14	4 „ „ 23a	2 „ „ 103c
20 „ „ 6a	3 „ „ 15	4 „ „ 25	2 „ „ 103e
4 „ „ 8	1 „ „ 15a	5 „ „ 26	1 „ „ 103f
4 „ „ 8a	3 „ „ 16	2 „ „ 27	2 „ „ 108
3 „ „ 9a	3 „ „ 16a	1 „ „ 27a	1 „ „ 111
6 „ „ 9c	3 „ „ 16b	2 „ „ 28	6 „ „ 111a
2 „ „ 9d	3 „ „ 17	2 „ „ 29	16 „ „ 111c
2 „ „ 9f	8 „ „ 18a	4 „ „ 31	8 „ „ 114
17 „ „ 10	4 „ „ 18b	1 „ „ 32	2 „ „ 115
	1 „ „ 19s	1 „ „ 35	3 „ „ 120a
	4 „ „ 19b	145 „ „ 37	2 „ „ 126a
		32 „ „ 37a	7 „ „ 136
		80 „ „ 38	2 „ „ 137
		1 „ „ 45	4 „ „ 142b
		3 „ „ 46	2 „ „ 147b
		6 „ „ 48	1 „ „ 155
		1 „ „ 58	8 „ „ 165
		32 „ „ 59	2 „ „ 166
		8 „ „ 62	1 „ „ 171
		2 „ „ 62b	1 „ „ 312
		7 „ „ 63	1 6-volt Motor